Maxsine

EP3 AC servo driver

User Manual

(First edition)

GL1A0/GL1A8/GL3A0/GL7A5/GL120/GL160/GL190/GL240/
GH3A5/ GH5A4/ GH8A5/ GH130/ GH170

Wuhan Maxsine Electric Co., Ltd

DECLARATION

Because improves and so on the reasons, the product specification or dimension has the change, not separate informs even slightly.

Safety Precautions

In order to use this product safely, the user should be familiar with and observes the following important items before proceeding with storage, installation, wiring, operation, inspection or maintenance for the product.

⚠危险	Indicates a disoperation possibly can cause danger and physical injure or death.
⚠注意	Indicates a disoperation possibly can cause danger and physical injure, and may result in damage to the product.
🛇禁止	Indicates a prohibited actions, otherwise can cause damage, malfunction to the product.

1. Service conditions

⚠危险
● Do not expose the product in moisture, caustic gas, and ignitable gas situation. Otherwise can cause an electric shock or fire. ● Do not use the product in direct-sunlight, dust, salinity and metal powder places. ● Do not use the product in the places that has water, oil and drugs drops.

2. Wiring

⚠危险
● Connect the earth terminal (PE) to earth reliably, otherwise can cause an electric shock or fire. ● Never connect the input power terminals (L1, L2, L3) to 380V power supply, otherwise can result in the equipment damage and an electric shock or fire. ● Do not connect the servo motor output terminals (U, V, W) to 3 phase AC power supply, otherwise can cause personnel casualty or fire. ● The output terminals (U, V, W) must be connected with the servo motor connections (U, V, W) correspondently, otherwise can result in the servomotor flying speed that may cause equipment damage and the personnel casualty ● Please fasten the input power terminals (L1, L2, and L3) and the output terminals (U, V, W). Otherwise may cause fire. ● Referring to wire selection guide, please install all wires with an adequate cross-section. Otherwise may cause fire.

3. Operations

⚠注意
● Before operating the mechanical device, it is necessary to set the parameters with appropriate values. Otherwise, can cause the mechanical device to out of control or break down. ● Before running the mechanical device, make sure the emergency stop switch can work at any time. ● Performing trial run without load, make sure that the servomotor is in normal operation. Afterwards joins again the load. ● Please do not turn on and off the main power supply more frequently, otherwise can cause the servo driver overheat.

4. Running

🛇禁止
● Do not touch any moving parts of the mechanical device while the servomotor is running, otherwise can cause personnel casualty. ● Do not touch servo driver and servomotor while the equipment is operating, otherwise can result in an electric shock or in burn. ● Do not move any connection cables while the equipment is operating, otherwise can result in physical injure or equipment damage.

5. Maintenance and inspection

🛇禁止
● Do not touch any portion inside of the servo driver and servomotor, otherwise can cause an electric shock. ● Do not remove the front cover of the servo driver while power is on, otherwise can cause an electric shock. ● Please wait at least 5 minutes after power has been removed before touching any terminal, otherwise the remaining high voltage possibly can cause an electric shock ● Do not change the wiring while the power is on, otherwise can cause an electric shock. ● Do not disassemble the servomotor, otherwise can cause an electric shock.

6. Service ranges

⚠注意
This handbook involves the product for the general industry use, please do not use in some equipment which may directly harm the personal safety, such as nuclear energy, spaceflight, aeronautic equipment, and life safeguard, life-support equipment and each kind of safety equipment. Please make contact with the company if have the need of use mentioned above.

CONTENTS

Chapter 1 Product inspection and installment

1.1 Product inspection

This product has made the complete function test before delivery, for prevented the product to be abnormal owing to shipping process, please make detail inspection as the following items after breaking the seal：

- Inspect the types of servo driver and servomotor and ensure that are the same types in the order form.
- Inspect the outward appearance of servo driver and servomotor to see any abrasion or damage; if so please do not wire to the power supply.
- Inspect the parts of servo driver and servomotor to see any loosen parts such as loosened or fallen off screw.
- Rotate the servomotor shaft by hand and should be smooth rotation. However, the servomotor with holding brake is unable to rotate directly.
- If there is any break down item or abnormal phenomenon mentioned above, please contact with the dealer immediately.

1.2 Product nameplate

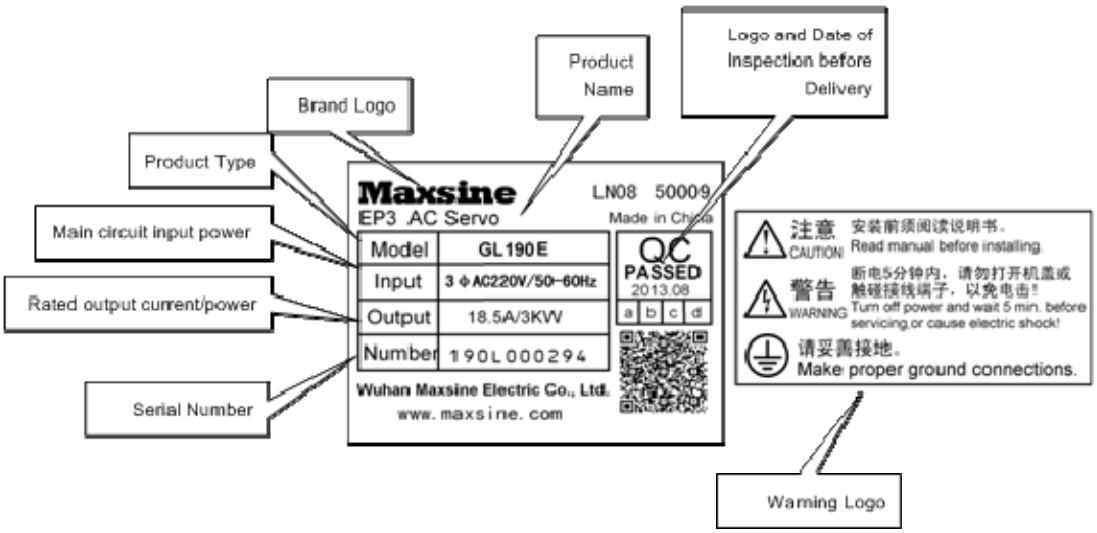

1.3 Product front panel

Applicable models: EP3-GL1A0、EP3-GL1A8、EP3-GL3A0、EP3-GL7A5、EP3-GL120、EP3-GL160

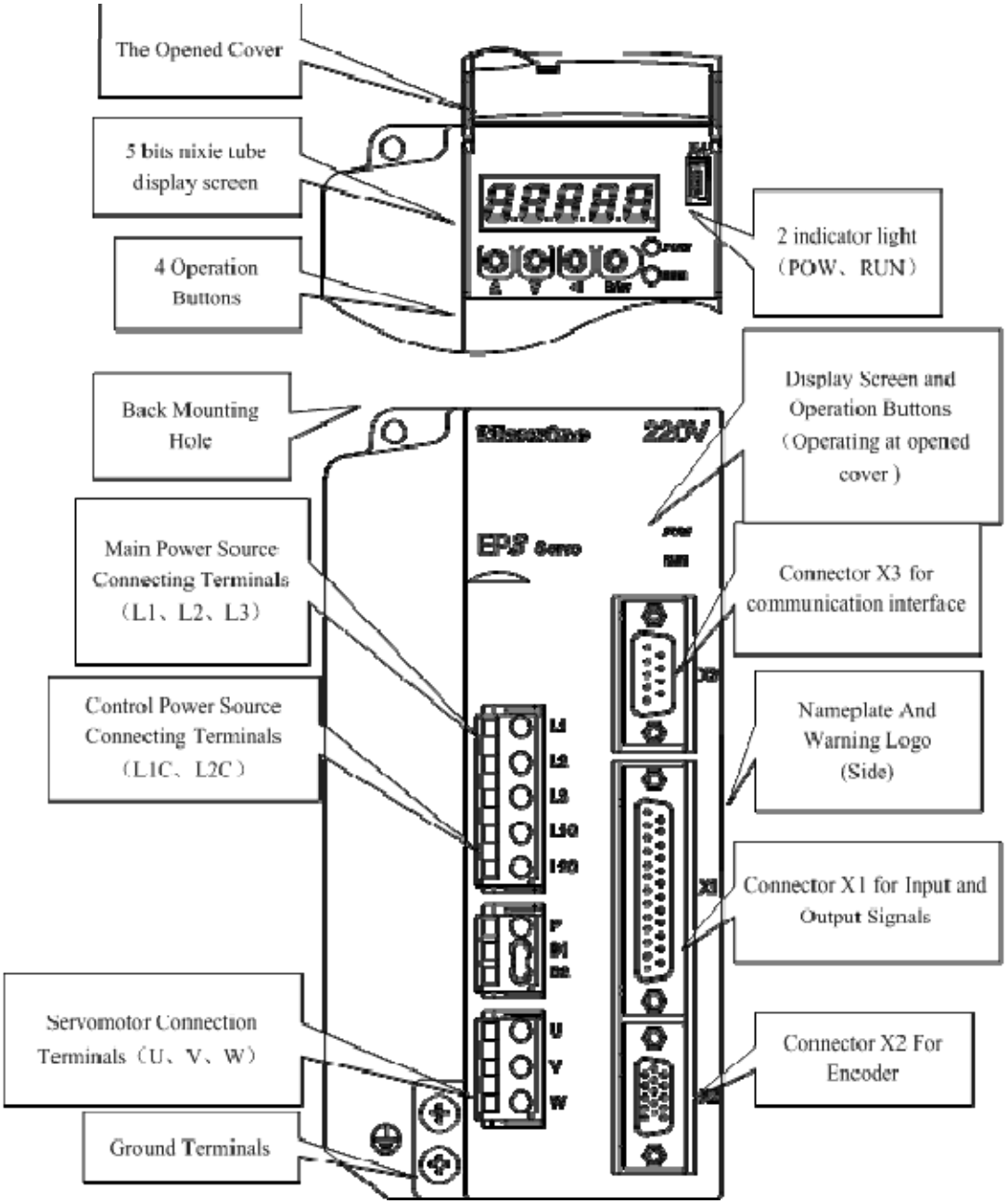

Note 1: The front panel of EP3-GL190 and EP3-GL240 servo driver is different from above picture. Please refer to *Main circuit terminal explanation.*

Applicable models: EP3-GH3A5，EP3-GH5A4

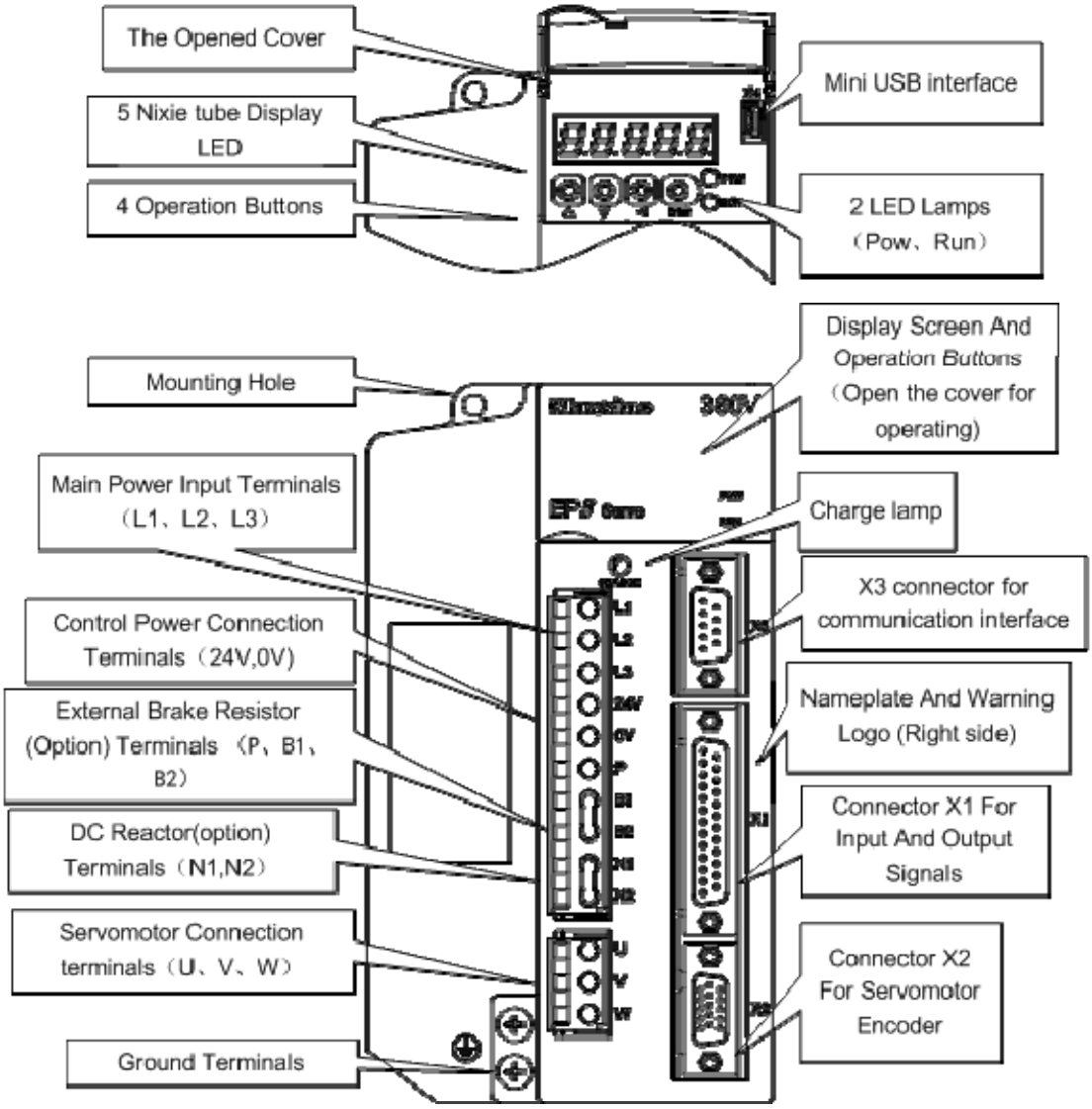

Note 1: The front panels of EP3-GH8A5、EP3-GH130 and EP3-GH170 servo driver are different from above picture. Please refer to *Main circuit terminal explanation*

1.4 Servo driver installation

1.4.1 The environmental conditions for installation

Since the environment conditions for servo driver installation have the direct influence to the normal function and service life of the servo driver, therefore the environment conditions must be conformed to the following conditions:

- Ambient temperature: 0 to 40℃; ambient humidity: less than 80% (no dew).
- Storage temperature: -40 to 50℃; Storage humidity: less than 93% (no dew).
- Vibration: less than 0.5G.
- Preventive measure shall be taken against raindrop or moist environment.
- Avoid direct sunlight.
- Preventive measure shall be taken against corrosion by oil mist and salinity.
- Free from corrosive liquid and gas.
- Preventive measure shall be taken against entering the servo driver by dust, cotton fiber and metal tiny particle.
- Keep away from radioactive and inflammable substances.
- When several driver installments in a control cubicle, for good ventilation please reserve enough space around each driver, install fans to provide effective cooling, keep less than 40℃ for long-term trouble-free service.
- If there are vibration sources nearby (punch press for example) and no way to avoid it, please use absorber or antivibration rubber filling piece.
- If there is disturbance from interferential equipment nearby along the wirings to the servo driver can make the servo driver misoperation. Using noise filters as well as other antijamming measure guarantee normal work of the servo driver. However, the noise filter can increase current leakage, therefore should install an insulating transformer in the input terminals of power supply.

1.4.2 The method of installation

- In order to get good cooling the servo driver should normally mount in vertical direction with the topside upward.
- For installing the servo driver, fasten the backboard of the servo driver with M5 screw bolt.
- Reserve enough space around the servo drivers as shown in the reference diagram. In order to guarantee the performance of the servo driver and the lifetime, please make the space as full as possible.
- To provide vertical wind to the heat sink of the servo driver should install ventilating fans in the control cubicle.
- Prevent the dust or the iron filings entering the servo driver when install the control cubicle.

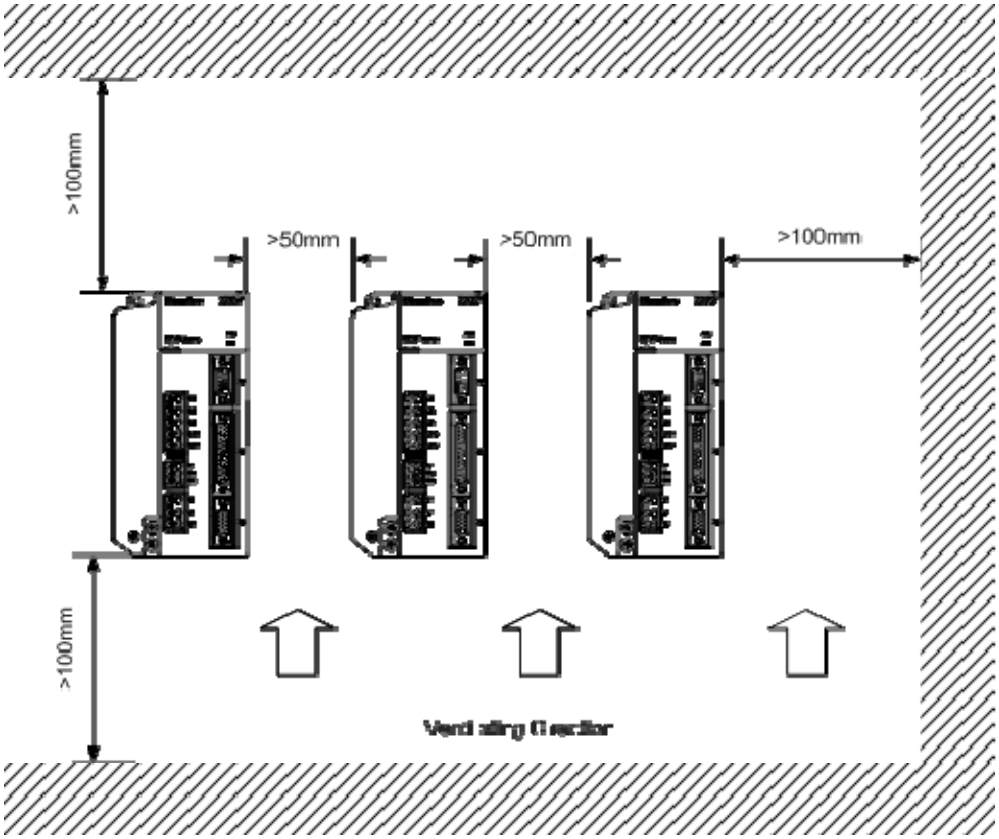
>100mm
>50mm
>50mm
>100mm
>100mm

1.5 Servo motor installation

1.5.1 The environmental conditions for installation

- Ambient temperature: 0 to 40℃; Ambient humidity: less than 80 %(no dew).
- Storage temperature: -40 to 50℃; Storage humidity: less than 93 %(no dew).
- Vibration: less than 0.5G.
- Install the servomotor in well-ventilated place with less moisture and a few dusts.
- Install the servomotor in a place without corrosive liquid, flammable gas, oil vapor, cutting cooling liquid, cutting chips, iron powder and so on.
- Install the servomotor in a place without water vapor and direct sunlight.

1.5.2 The method of installation

- For horizontal installation: In order to prevent water, oil, etc. from entering inside of the servomotor, please put the cable connector downward.
- For vertical installation: if the shaft of the servo motor is in upward direction with a speed reducer, some prevention measure shall be taken against entering inside of the servomotor by oil come from the speed reducer.
- Motor shaft extension should be long enough, or may cause vibration while motor is in running
- In case of installation or removing the servomotor, please do not hit the servomotor with a hammer, otherwise the shaft and the encoder can be damaged.

1.6 The definition of rotating direction for servomotor

The motor rotating direction description in this handbook is defined as facing the shaft of the servomotor, if the rotating shaft is in counterclockwise direction will be called as positive direction, or in clockwise as reversal direction.

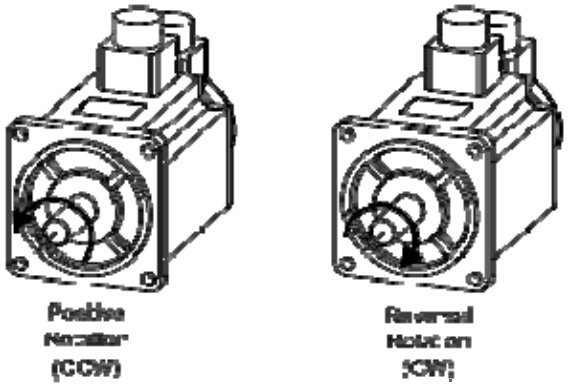

Chapter 2 Wiring

2.1 System construction and wiring

2.1.1 Servo driver wiring diagram

1 EP3-GL series Servo driver wiring

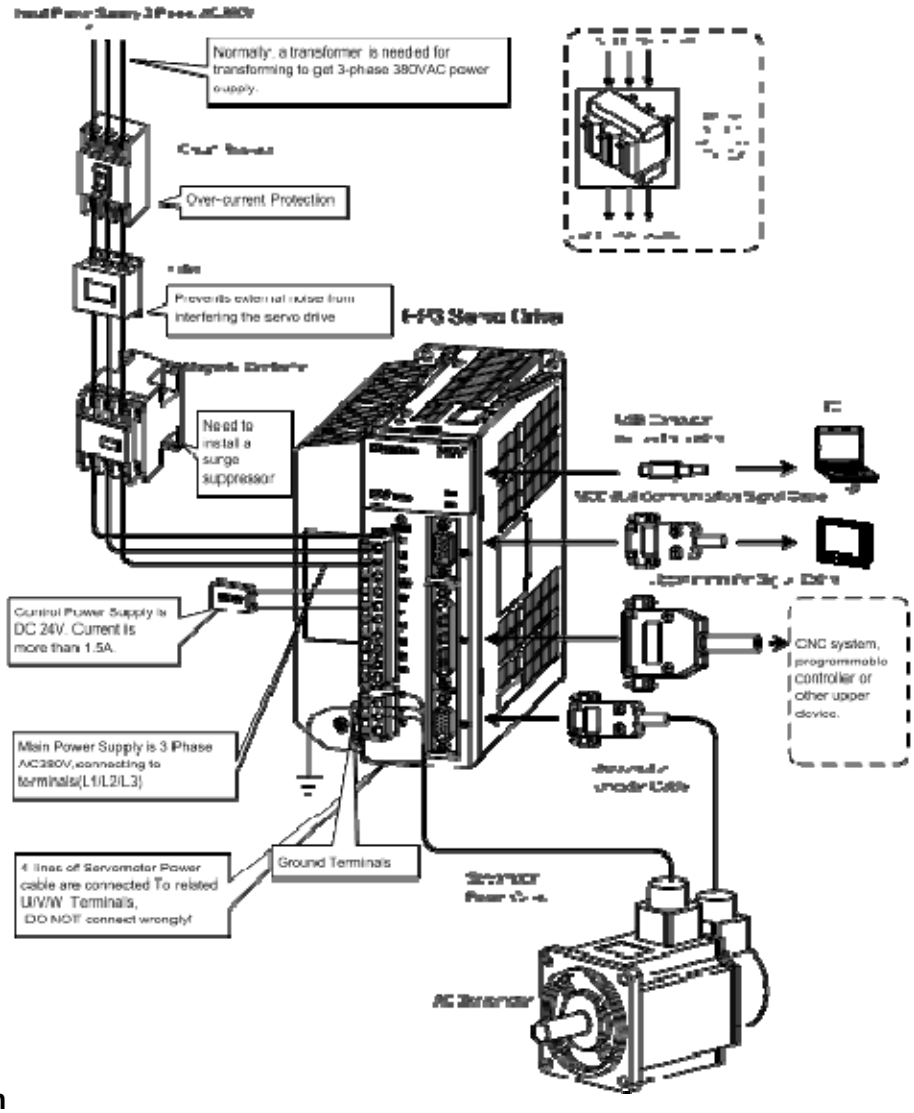

diagram

Note: This wiring method is only suitable for EP3-GL1A0、EP3-GL1A8、EP3-GL3A0、EP3-GL7A5、EP3-GL120、

EP3-GL160 servo driver. For EP3-GL190 and EP3-GL240, please refer to chapter 2.1.5.

2 EP3-GH series Servo driver wiring diagram

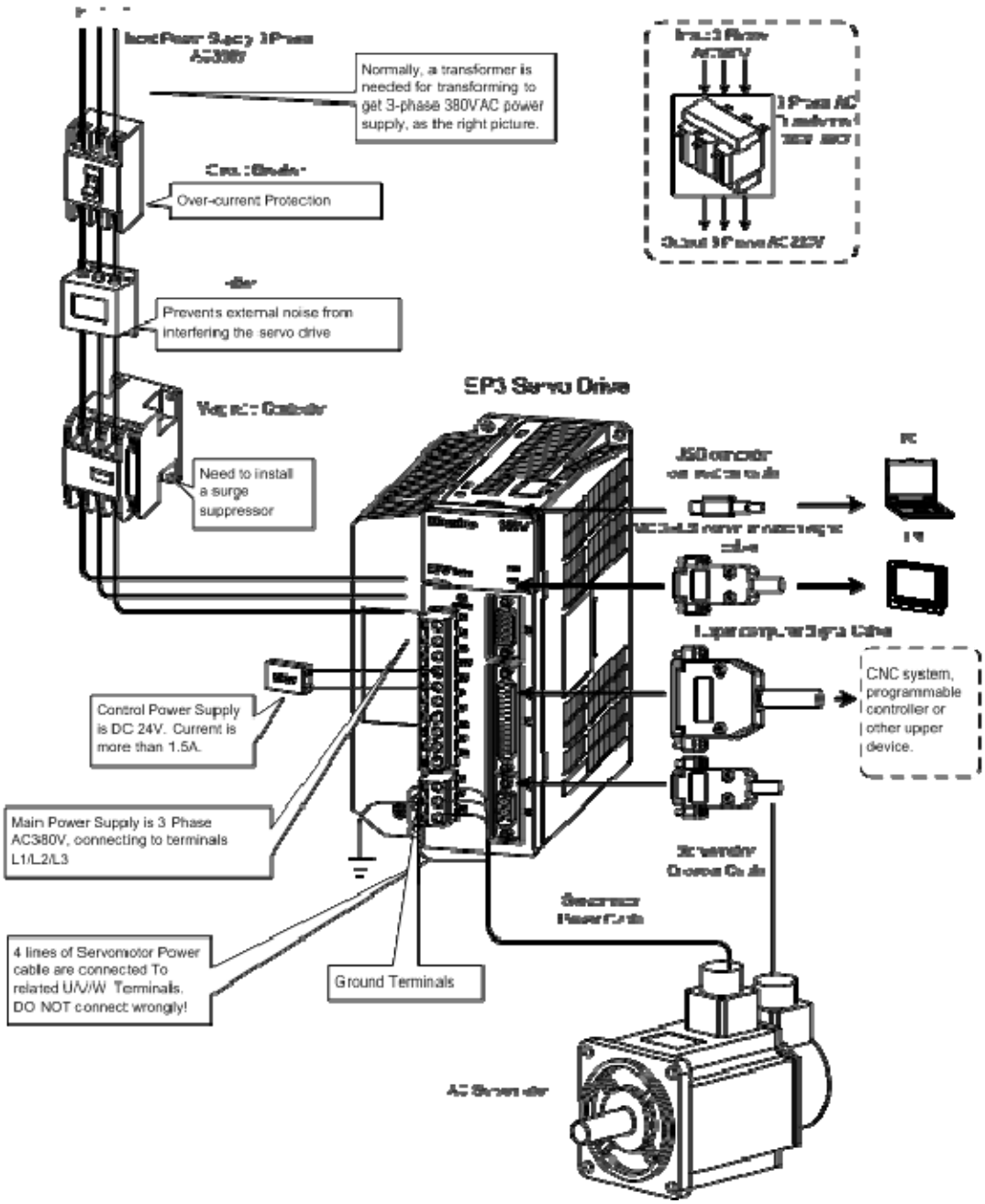

Note: This wiring method is only suitable for EP3-GH3A5 and EP3-GH5A4 servo driver. For EP3-GH8A5、EP3-GH130 and EP3-GH170, please refer to chapter 2.1.5.

2.1.2 Wiring explanations

Wiring Notes:

- According to electric wire specification, use the wiring materials.
- The control cable length should be less than 3 meters and the encoder cable length 20 meters.
- EP3-GL series: check that the power supply and wiring of L1, L2, L3 and L1C, L2C terminals are correct. Please do not connect to 380V power supply.
- EP3-GH series: check that the power supply and wiring of L1, L2, L3 and 0V, 24V terminals are correct.
- The output terminals(U,V,W) must be connected with the servo motor connections(U,V,W) correspondently, otherwise the servo motor will stop or over speed. However, by exchanging three-phase terminal cannot cause the motor to reverse; this point is different from an asynchronous motor.
- Earthed wiring must be reliable with a single-point connection.
- Pay attention to the correct direction of freewheel diode which is connected with the relay at the output terminal, otherwise can cause the output circuit breakdown.
- In order to protect the servo driver from noise interference that can cause malfunction, please use an insulation transformer and noise filter on the power lines.
- Wiring the power lines (power supply line, main circuit lines, etc.) at a distance above 30cm from the control signal wires, do not lay them in one conduit.
- Install a non-fuse circuit breaker that can shut off the external power supply immediately for in case of the servo driver fault.

2.1.3 Electric wire specifications

Connect terminal		symbol	Wire specification
Main power supply		L1、L2、L3	1.5～4mm^2
Control power supply	EP3-GL series	L1C、L2C	0.75～1.0mm^2
	EP3-GH series	24V、0V	0.75～1.0mm^2
Servomotor		U、V、W	1.5～4mm^2
Ground		⏚	1.5～4mm^2
Control signals		X1	≥0.14mm^2(AWG26), shielded
Encoder signals		X2	≥0.14mm^2(AWG26), shielded
communication		X3	≥0.14mm^2(AWG26), shielded
brake resistor		P、B1/P、B	1.5～4mm^2

Must use a twisted pair wire cable for the encoder signal wiring. If the encoder signal cable is too long (>20m), in which the encoder power supply can be insufficient, may use multi-wire or thick wire for the power supply wiring.

2.1.4 Main circuit terminal explanation

Terminal name	Symbol	Model	Detailed explanation
Main power supply	L1、L2	EP3-GL1A0、EP3-GL1A8 EP3-GL3A0	1 phase 220VAC -15%～+10% 50/60Hz
	L1、L2、L3	EP3-GL7A5、EP3-GL120 EP3-GL160、EP3-GL190 EP3-GL240	3 phase 220VAC -15%～+10% 50/60Hz
		EP3-GH series	3 phase 380VAC -15%～+10% 50/60Hz
Control power supply	L1C、L2C	EP3-GL series	1 phase 220VAC -15%～+10% 50/60Hz
	24V、0V	EP3-GH series	Connect DC 24V externally
Brake resistor	P、B1、B2	EP3-GL1A0 、EP3-GL1A8 EP3-GL3A0 、EP3-GL7A5 EP3-GL120、EP3-GL160 EP3-GH3A5 、EP3-GH5A4	When the external brake resistor is needed, disconnect the short wires between B1 and B2 [note 2] and crossover the external brake resistor to terminals P and B1. Leave B2 unconnected.
	NC、P、B	EP3-GL190、EP3-GL240【note 1】 EP3-GH8A5、EP3-GH130 EP3-GH170	When the external brake resistor is needed, it must disconnect the internal brake resistor wire between terminals P and B firstly, connect those two wires to NC at the same time, and then crossover the external brake resistor to terminals P and B.
Power supply higher order harmonics restrain-use	N1、N2	EP3-GL190、EP3-GL240 EP3-GH3A5 、EP3-GH5A4 EP3-GH8A5 、EP3-GH130	When the power supply higher order harmonics needs to be restrained, connect the DC reactor between N1 and N2[note 2]

DC reactor connection terminals		EP3-GH170	
Servomotor	U	EP3 series	U phase output to servomotor
	V		V phase output to servomotor
	W		W phase output to servomotor
Ground	⏚	EP3 series	Ground terminal of servomotor
	⏚		Ground terminal of servo driver

Note 1: there is no internal brake resistor in EP3-GL240. When the external brake resistor is used, please connect to the terminal P and B of EP3-GL240, leave the NC alone.

Note 2: the factory default connection of internal brake resistor: B1 and B2 are in the state of short-circuited; N1 and N2 are in the state of short-circuited.

2.1.5 Servo motor and AC power supply wiring diagrams

1. The power supply for the servo driver EP3-GL series is a three-phase AC 220V which generally come from three-phase AC380V power supply through a transformer. In peculiar circumstance, the small servomotor, which is less than 750W, can use single-phase AC220V (L1 and L2 terminals connect to single-phase power supply. Leave L3 terminal alone).

Applicable types: EP3-GL1A0、EP3-GL1A8、EP3-GL3A0、EP3-GL7A5、EP3-GL120、EP3-GL160

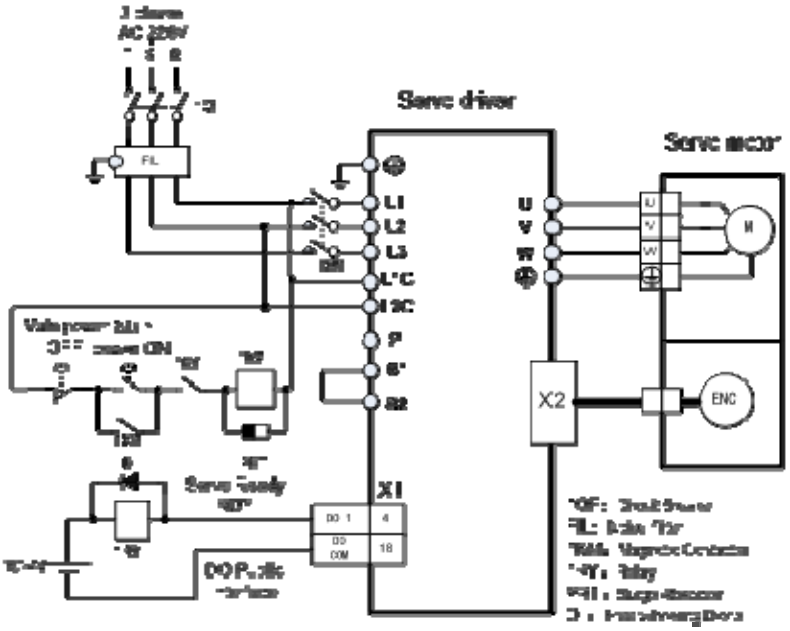

Applicable types : EP3-GL190、EP3-GL240 【note】

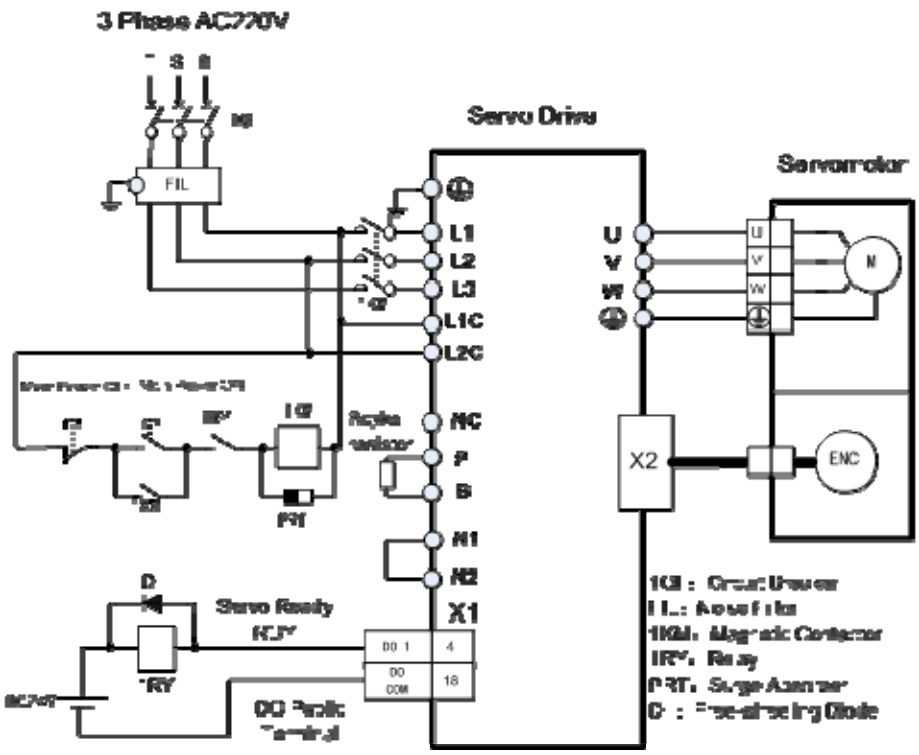

Note: there is no internal brake resistor in EP3-GL240. When the external brake resistor is connected, please crossover the terminal P and B and leave the NC alone.

2. Two kinds of connection of EP3-GH series

Applicable types: EP3-GH3A5、EP3-GH5A4

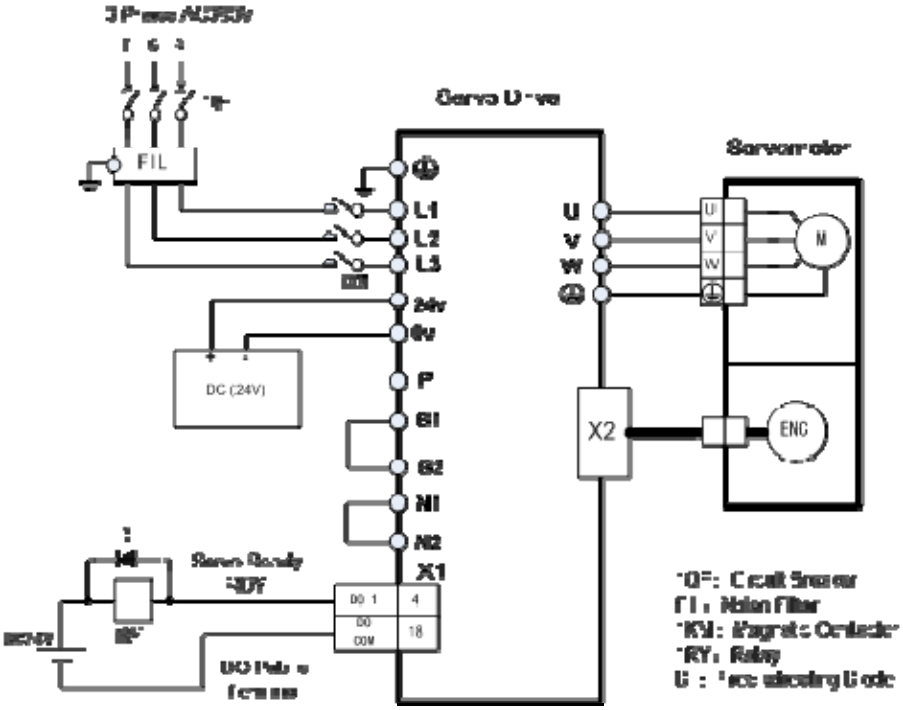

Applicable types: EP3-GH8A5、EP3-GH130、EP3-GH170

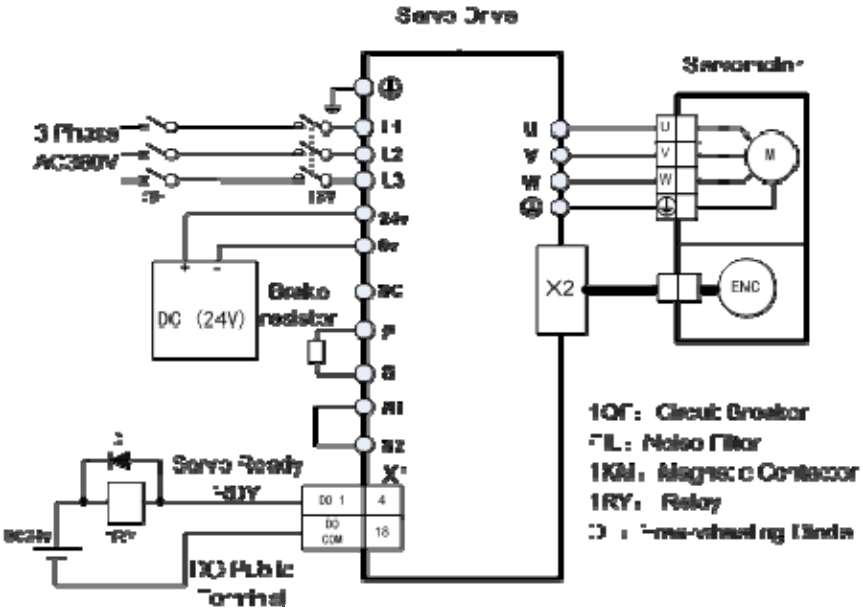

2.2 X1 terminals for control signals

The X1 connector DB25 plug provides the signals interfaced with the host-controller. The

signal includes:

- Five programmable inputs;
- Three programmable outputs;
- Analog command inputs;
- Pulse command inputs;
- Encoder signal outputs.

2.2.1 X1 terminal connector

The X1 connector plug uses DB25 male head, the contour and pin disposition charts are as the followings:

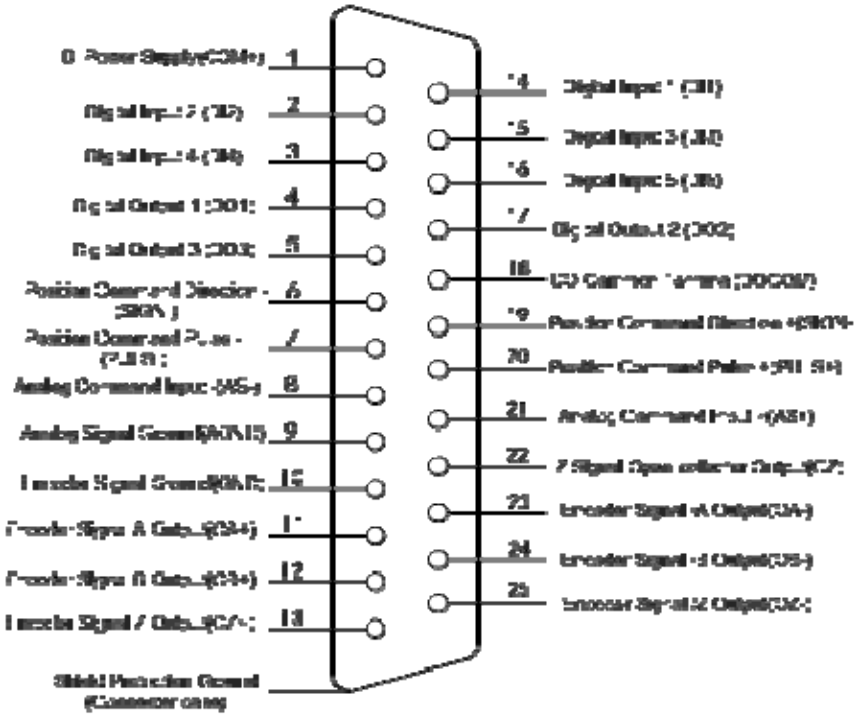

Servo Drive X1 Connector

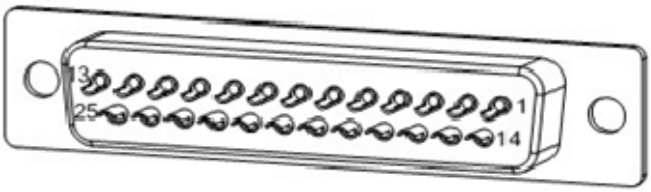

Connector X1 Soldering Lug Disposition

2.2.2 X1 terminal signal explanation

Name of signals		pin number	functions	connector
digital inputs	DI1 DI2 DI3 DI4 DI5	14 2 15 3 16	Photo isolation input; function is programmable; defines by parameter P100 to P104.	C1
	COM+	1	DI power supply (DC12V～24V).	
digital output	DO1 DO2 DO3	4 17 5	Photo isolation output; maximum output: 50mA/25V; function is programmable; defines by parameter P130~P132.	C2
	DOCOM	18	DO common terminal	
position command pulse	PULS+ PULS- SIGN+ SIGN-	20 7 19 6	high speed photo isolation input; working mode set by parameter P035: ● pulse + mark; ● positive/Reverse pulse; ● Orthogonal pulse.	C3
Analog command inputs	AS+ AS-	21 8	Speed/torque analog quantity input; the range is -10V to + 10V.	C4
	AGND	9	Analog Ground.	
Output signals of encoder	OA+ OA- OB+ OB- OZ+ OZ-	11 23 12 24 13 25	Outputs of differential driver (Line Driver) after the frequency division of encoder signal.	C5
	CZ	22	Open collector output of Z signal.	C6
	GND	10	Encoder signal ground.	
Shield protection ground	Metal case of connector		Shielded wire for connection with shielded cable.	

2.2.3 X1 terminal interface type

The followings introduce the X1 various interface circuits and the wiring ways with the host-controller.

1. Digital input interfaces (C1)

For carrying on a control, the digital input interface circuit can be constructed by switch, relay, open-collector triode, and photo-coupler and so on. To avoid contacting problem the relay must be chosen with low current operation. External voltage is in the range of DC12V~24V.

C1-1: Switch input	C1-2: Open collector triode
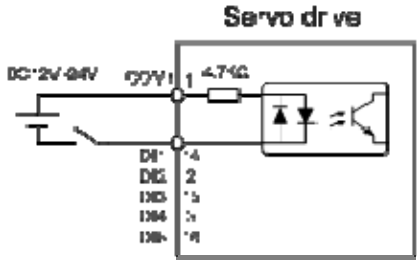	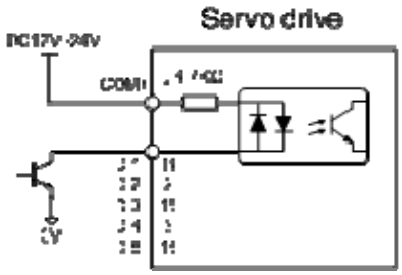

2. Digital output interfaces (C2)

The digital outputs use Darlington photo-coupler. It can be connected with relay, photo-coupler. Matters of note are:

- Inverting the polarity of DC power source, which is provided by the user, can cause the servo driver damage.
- The maximum voltage of external DC power supply is 25V, the maximum output current is 50mA, and the total current for three channels is not in excess of 100mA.
- When using relay like inductive loads, a free-wheel diode must be connected with the inductive load in parallel. If the diode connects in wrong direction can cause damage to the output circuit.
- Owing to the low level of output is approximately 1V and cannot satisfy the TTL low-level request, therefore cannot directly connect with the TTL circuit.

C2-1: Relay	C2-2: Photo coupler
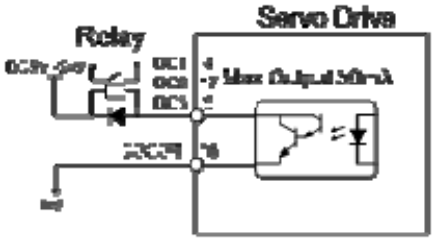	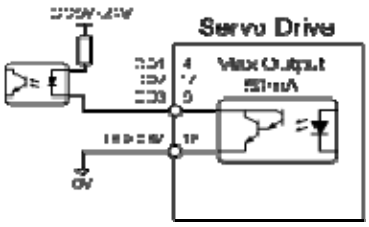

● Freewheel diode must be connected.	

3. Position command pulse interfaces (C3)

There are both differential and single end connections. The differential connection is recommended and the twisted pair wire is used suitably. The drive current is in the range of 8 to 15mA.The operation mode is set by parameter P035: Pulse + direction, CCW/ CW pulse, A phase + B phase (orthogonal pulse).

C3-1: Differential drive	C3-2: single end drive
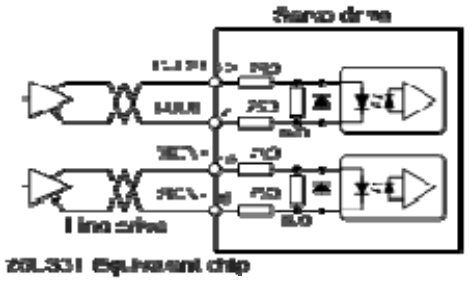	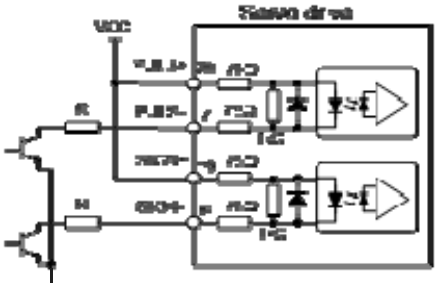
● Maximum pulse frequency is 500kHz(kpps)； ● This connection is recommended in order to avoid interference.	● Maximum pulse frequency is 200kHz(kpps)； ● recommend the value of resistor R: VCC / R 5V / 82Ω~120Ω 12V / 510Ω~820Ω 24V / 1.5kΩ~2kΩ

4. Analog command input interfaces (C4)

There are both differential and single end connections. The differential input connection is recommended. The speed and the torque use the same analog input. The input is in the range of -10V~+10V.The input impedance is approximately 10k. There is normally a zero-bias at analog input and can be compensated by the parameter setting.

C4-1：Analog differential input	C4-2: Analog single end input
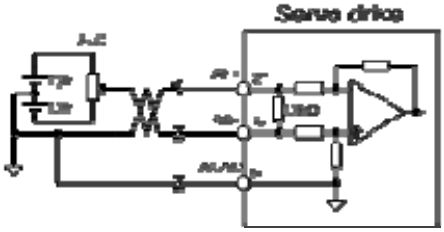	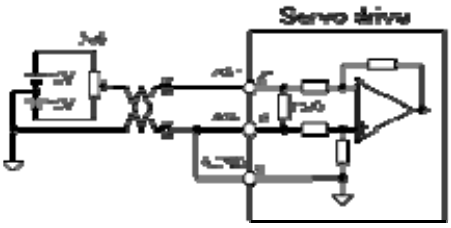
● Needs 3 line connections with the host controller; ● Strong anti-common mode	● Needs 2 line connections with the host controller; ● AGND connects with AS- on the

interference; ● Recommends using shielded cable.	inside of X1 plug; ● Recommends using shielded cable.

5. Line driver outputs of the encoder signals (C5)

The signal divided from the encoder signal is transferred to the host-controller through the line driver.

C5-1:Long line receiver	C5-2: photo coupler receiver
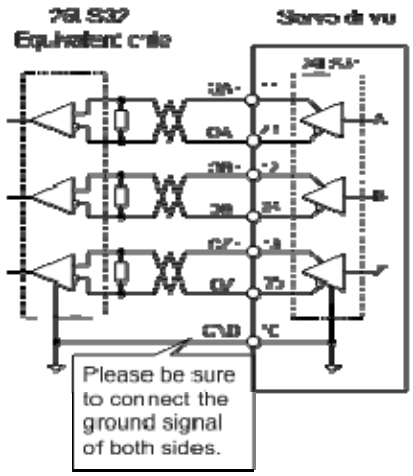	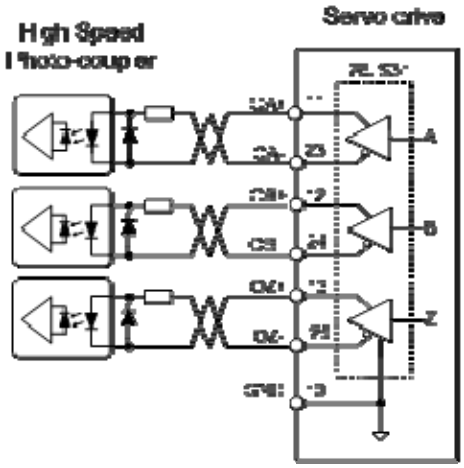
● On the host controller uses AM26LS32(or equivalent) to make the receiver, must connect the terminal resistance, the value is 220Ω～470Ω; ● Encoder signal (GND) of servo driver must connect with the ground terminal on host controller.	● On host controller use high-speed photo coupler (e.g. 6N137); Current limiting resistor is about 220Ω.

6. Open-collector output of encoder Z signal (C6)

The Z signal of the encoder is transferred to the host-controller through the open-collector circuit. Because the width of the Z pulse is narrow, please use a high-speed photo-coupler to receive it.

C6: Open collector output of encoder Z signal

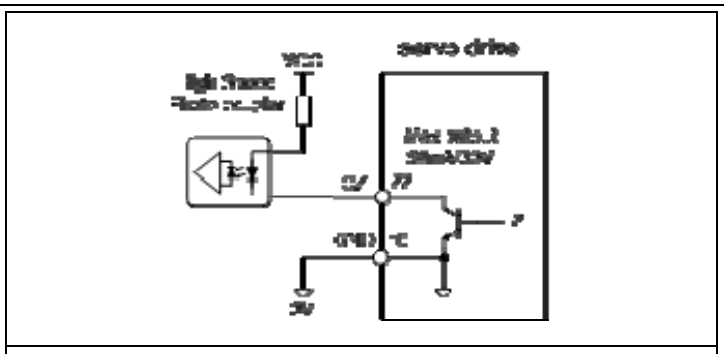

- 30V is the maximum voltage of external power supply; 50mA is the maximum current output.

2.3 X2 encoder signal terminals

2.3.1 X2 terminal connector

The connection diagram of X2 encoder signal terminals and motor encoder.
The terminal which is used to connect incremental encoder is 3 rowa of DB 15 socket (VGA socket). The contour and pon are displayed as follow:

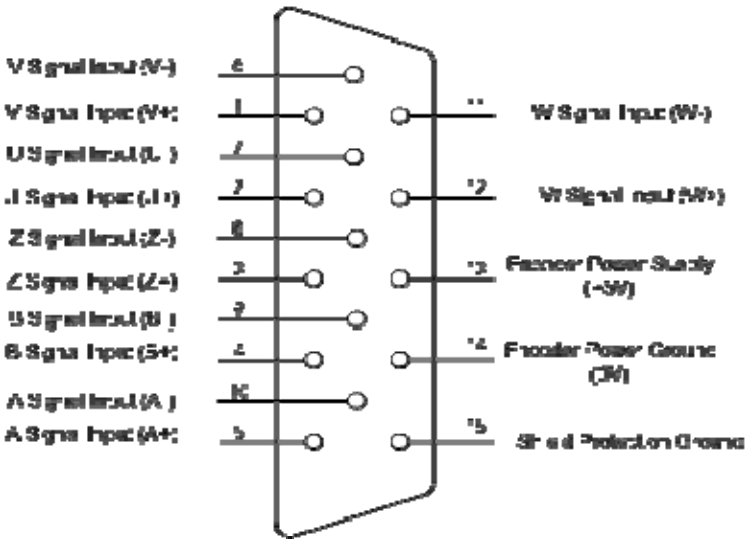

Servo Drive X2 Connector (Standard Incremental Encoder)

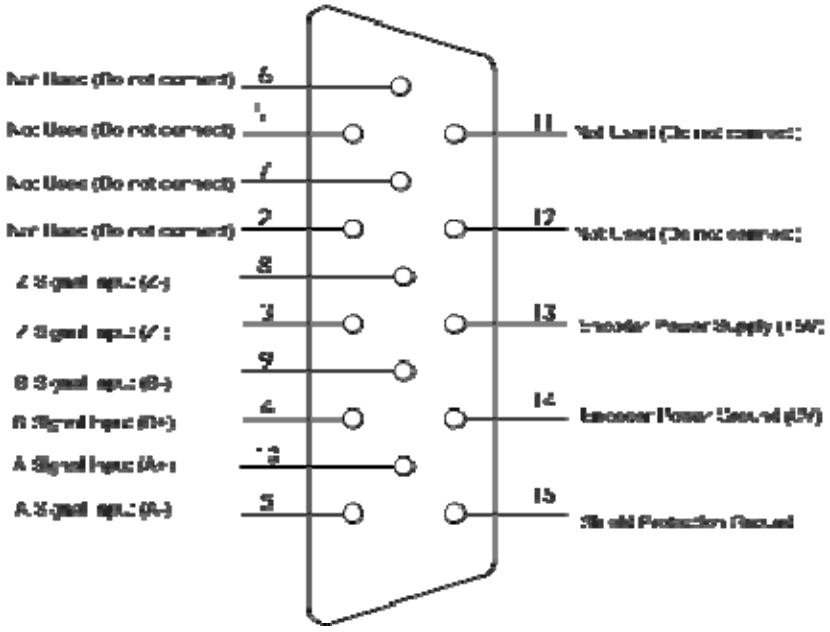

Servo Drive X2 Connector (Fewer-line Incremental Encoder)

Incremental Connector X2 Soldering Lug Disposition

The terminal which is used to connect 17 bits absolute encoder or rotary encoder is 2 rows of DB 9 socket. The contour and pin are displayed as follows:

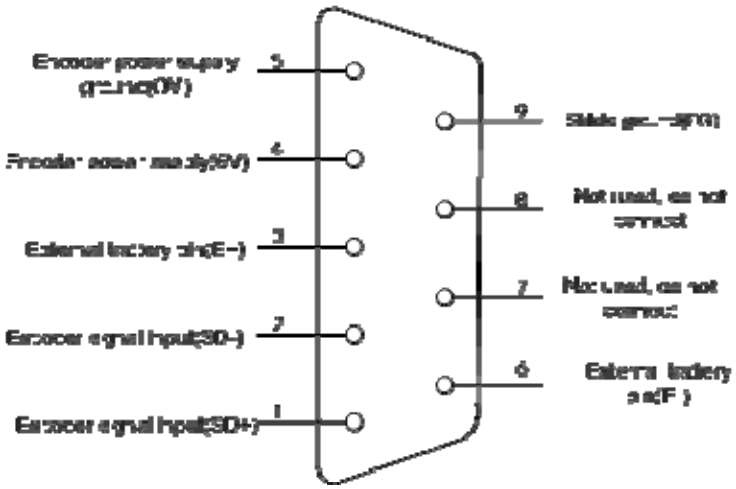

DB9 plug of Encoder terminal (absolute encoder)

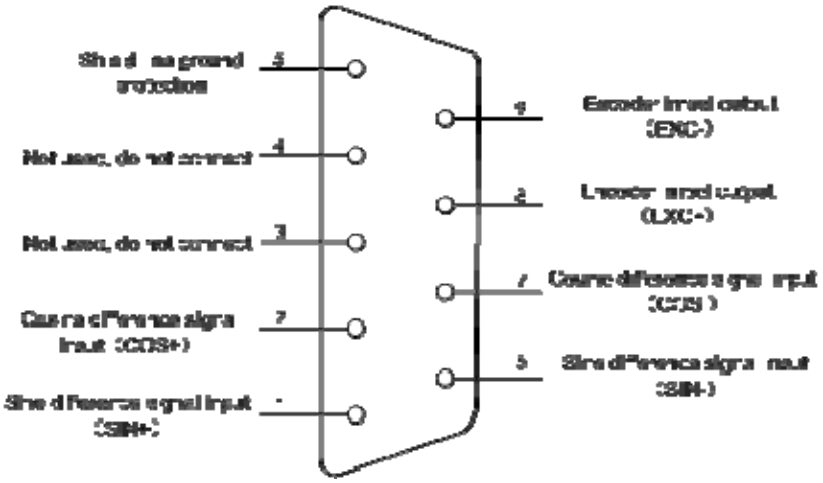

DB9 plug for Encoder terminal (resolver encoder)

Encoder terminal DB9 plug Soldering Lug Disposition

2.3.2 X2 terminal signal explanation

Defination of incremental encoder:

Signal name of encoder		Pin number	Colour of wire		Functions
			standard (16core) [note1]	Wire saving (10core) [note2]	
Power supply	5V	13	red+red /white	red+red /white	Use 5VDC power supply (provided by servo driver).If the cable is longer than 20m, in order to prevent encoder from voltage drop down, it is better to use multi wire or thick wire for power line and ground line.
	0V	14	black+black /white	black+black /white	
A phase input	A+	5	brown	brown	Connect with A phase output of encoder.
	A-	10	Brown/white	Brown/white	
B phase input	B+	4	yellow	yellow	Connect with B phase output

	B-	9	Yellow /white	Yellow /white	of encoder.
Z phase input	Z+	3	green	green	Connect with Z phase output of encoder.
	Z-	8	Green/white	Green/white	
U phase input	U+	2	purple		Connect with U phase output of encoder. Not connect for wire saving.
	U-	7	Purple /white		
V phase input	V+	1	blue		Connect with V phase output of encoder. Not connect for wire saving.
	V-	6	Blue/white		
W phase input	W+	12	orange		Connect with W phase output of encoder. Not connect for wire saving.
	W-	11	Orange /white		
Shield protection ground	FG	15	Bare wire	Bare wire	Connect with cable shield wire.

Definition of absolute encoder:

Signal name of encoder		Pin number	Functions	
			standard (10 core)	
Power supply	5V	4	red+red /white	Use 5VDC power supply (provided by servo driver).If the cable is longer than 20m, in order to prevent encoder from voltage drop down, it is better to use multi wire or thick wire for power line and ground line.
	0V	5	black+black /white	
Signal input	SD +	1	brown	Connect with the absolute encoder signal input
	SD -	2	Brown/white	
External battery pin	E+	3	yellow	External battery pin
	E-	6	Yellow /white	

Shield protection ground	FG	9	Bare wire	Connect with cable shield wire.

Note 1:16 core cable for the type of 16FMB15 (for using in the 110 and above frame of servomoto)

Note 2: 10 core cable for the type of 10FBM15X (for using in the 80 frame of servomotor)

Definition of resolver encoder:

Signal name of encoder		Pin number	Functions	
			standard (10core)	
Encoder excited output	EXC +	8	red	They are a pair of difference output signal and need to be twisted together. They are used for the excited signal of driver to output to resolver.
	EXC -	9	red /white	
Sine difference signal input	SIN +	1	brown	They are a pair of difference signal and need to be twisted together. They are used for the sine signal of resolver to feedback to driver.
	SIN-	6	Brown/ white	
Cosine difference signal input	COS +	2	yellow	They are a pair of difference signal and need to be twisted together. They are used for the cosine signal of resolver to feedback to driver.
	COS -	7	Yellow /white	
Shield protection ground	FG	5	Bare wire	Connect with cable shield wire

2.4 X3 terminal connector

Communication terminal adopts DB9 socket of two rows

Signal name		Pin number	Functions
RS-485 Input and output signal wire	A	5	The input and output signal wire used in the RS-485 two wire communication.
	B	4	
Terminal resistor connection wire	Ar	2	Short circuit pin 2 and pin 3. Crossover the 120Ω terminal resistance between signal A and B.
	Br	3	
Shield protection ground	FG	6	Connect with cable shield wire

Partial circuit diagram of X3 connector is as following:

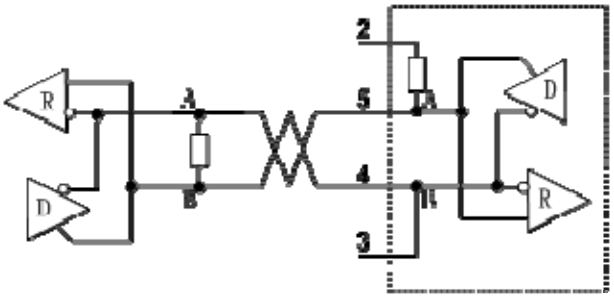

In this chart, A stands for difference positive signal input and output; B stands for difference negative signal input and output.

2.5 Standard wiring diagram

2.5.1 Wiring diagram for position control

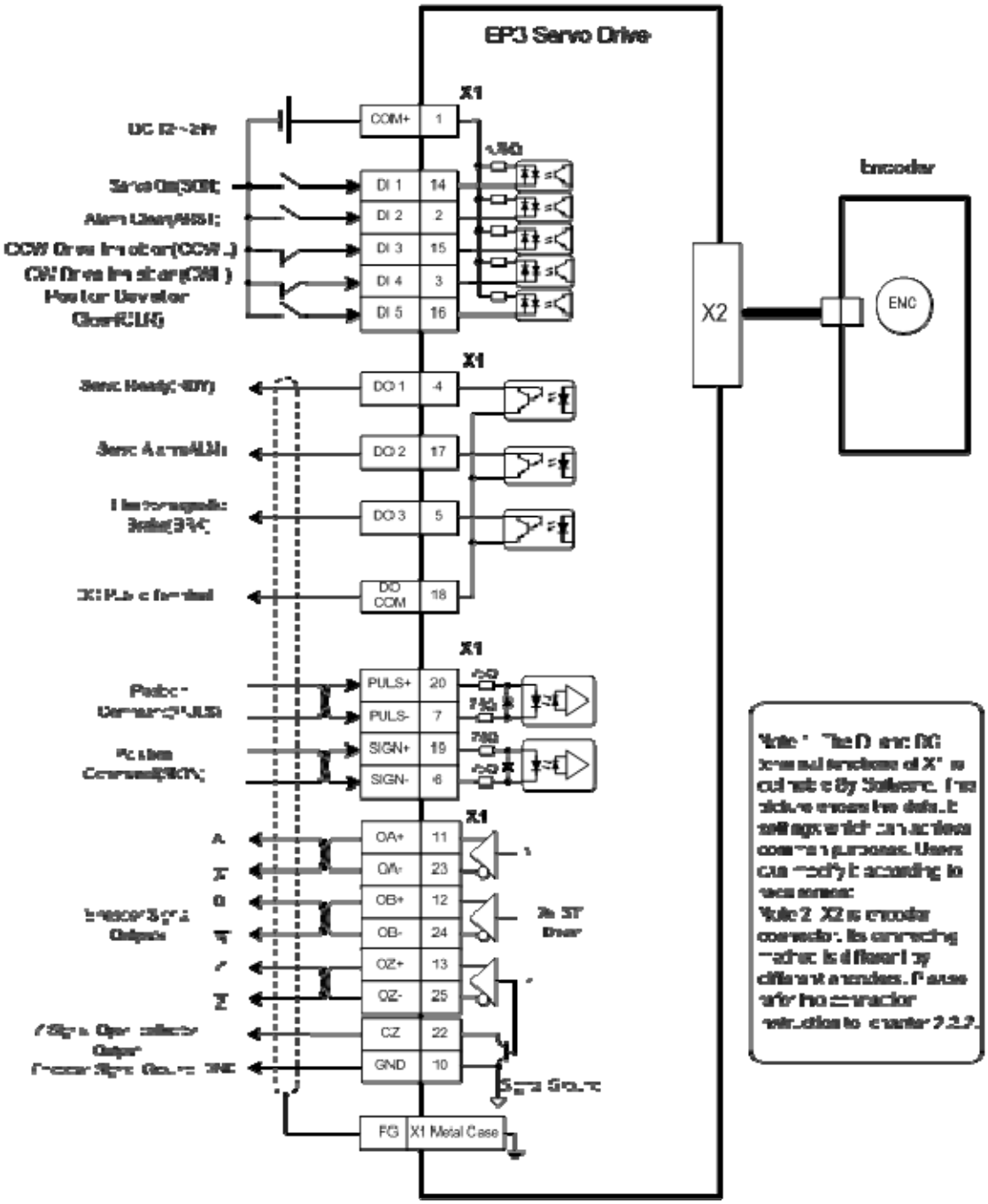

2.5.2 Wiring diagram for speed or torque control

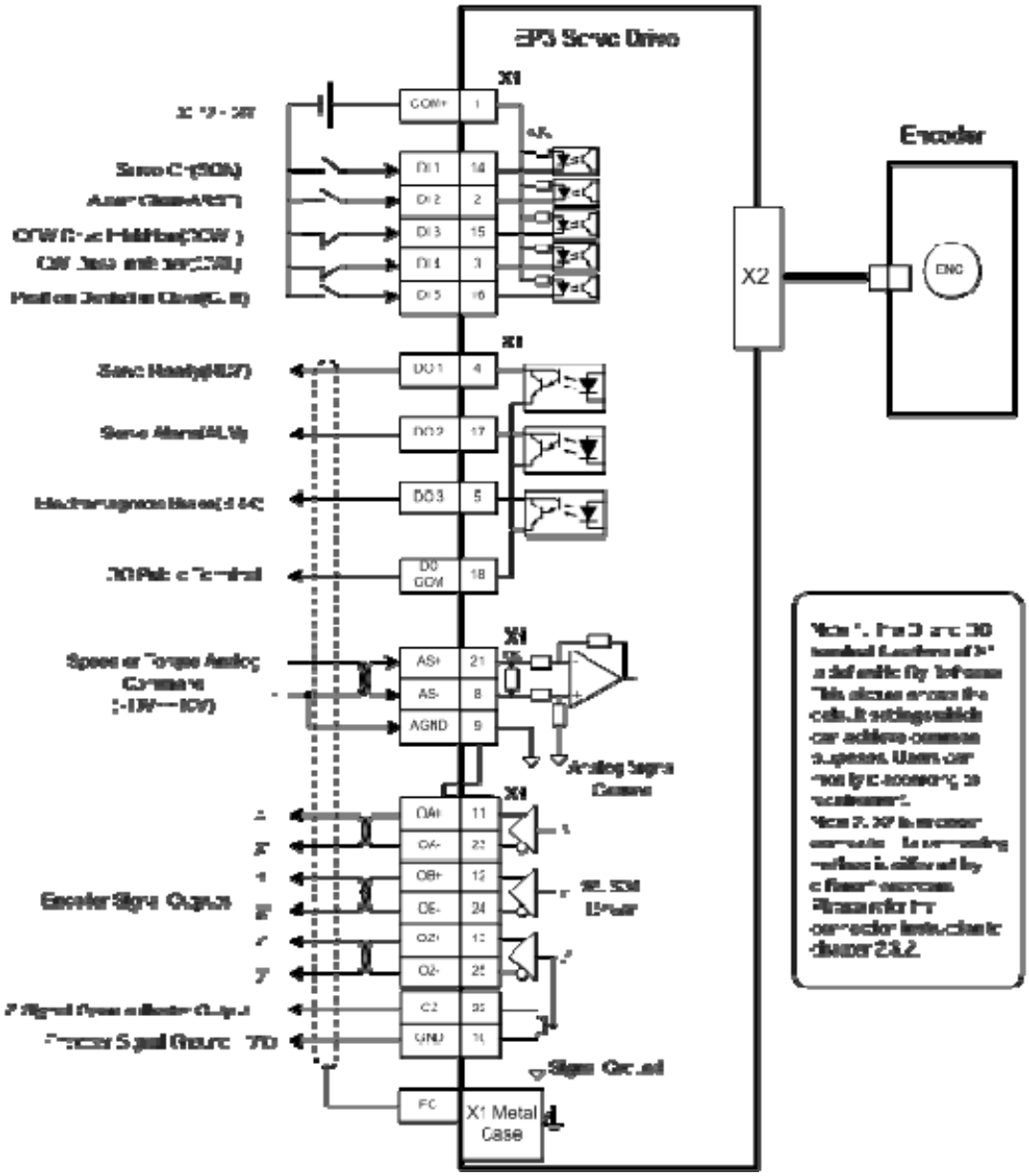

2.6 The connection of brake resistor

When the internal brake resistor is used, it is necessary to short circuit B1 and B2 (as the picture A shows); while for the driver models as picture B shows, they can be used directly as they deliveried from factory.

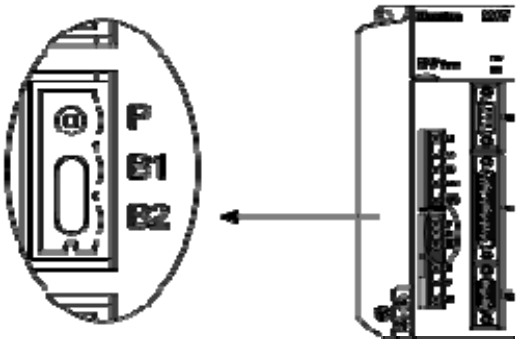

PictureA

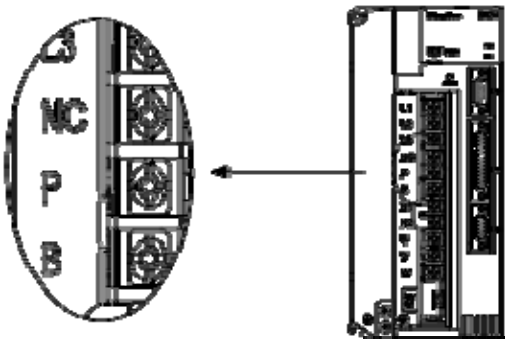

PictureB

When the external brake resistor is connected to the servo driver, the short circuit wire between B1 and B2 must be disconnected fiestly, and then crossover the external brake resistor to terminals P and B1 (for the driver models as picture C shows); but for the servo driver models as picture D shows, the internal brake resisitor wire between terminals P and B must be disconnected, and connect those two wires to NC at the same time. Then crossover the external brake resistor to terminals P and B.

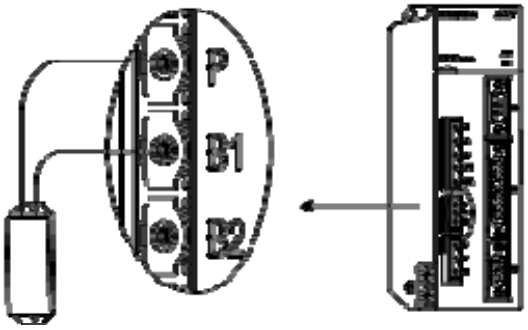

Picture C

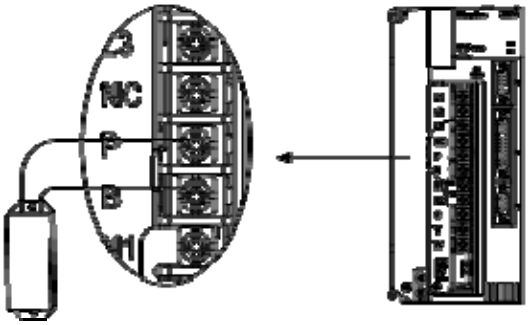

Picture D

Note 1: The connection way of resistor, as the picture A and C shows, is suitable for EP3-GL1A0、EP3-GL1A8、EP3-GL3A0、EP3-GL7A5、EP3-GL120、EP3-GL160、EP3-GH3A5 and EP3-GH5A4 servo drive

Note 2: The connection way of resistor, as the picture B and D shows, is suitable for EP3-GL190、EP3-GL240、EP3-GH8A5、EP3-GH130、and EP3-GH170 servo drive

Special note: there is no internal brake resistor in EP3-GL240. When the external brake

resistor is used, please crossover it between the terminals of P and B. Leave the NC alone.

2.7 The connection of reactor

When it needs to be restrained to the power supply higher order harmonics, connect the direct current reactor between N1 and N2.

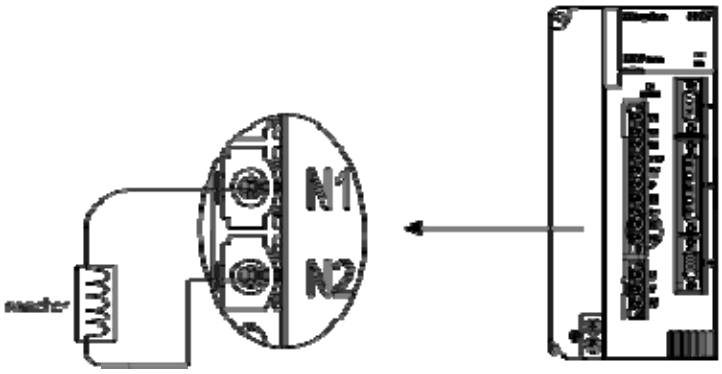

Note 1: There is the function of connecting external reactor only in EP3-GL190、EP3-GL240、EP3-GH3A5、EP3-GH5A4、EP3-GH8A5、EP3-GH130、EP3-GH170 servo drive.

Chapter 3 Front panel operation

3.1 Explanation of the front panel of servo driver

3.1.1 Front panel compositions

The front panel consists of the display (5-digit, 7-segment LED) and four switching buttons (8 、 2 、 4 、 5) and one USB interface. It displays monitor status, parameters and changes the parameter setting value and so on. The main menu is in cascade sequence mode and executes in layer.

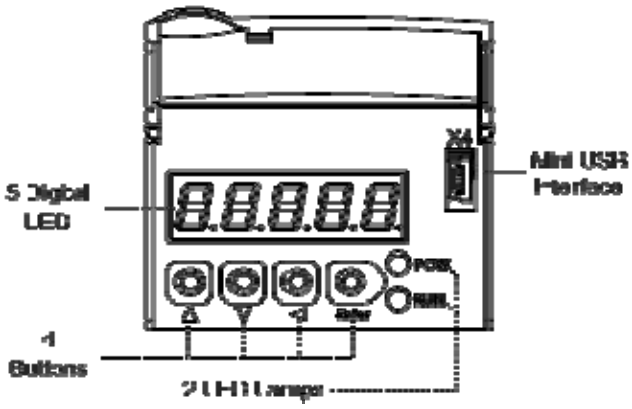

3.1.2 Front panel explanations

Symbol	Name	Functions
POW	Main power lamp	Lit: Main power supply already turn on; Go out: Main power supply did not turn on
RUN	Running lamp	Lit: Servomotor is active; Go out: Servomotor is not active.。
8	Increasing button	Increase sequence number or value; Press down and hold to repeat increasing.
2	Decreasing button	Decrease sequence number or value; Press down and hold to repeat decreasing.
4	Exit button	Menu exit; cancel the operation.
5	Confirm button	Menu entered; the operation confirmed.
	USB interface	Connect the device to computer.

3.1.3 Data display

A number is shown by five digital displays; a minus symbol in front of the value represents a negative value; the lit decimal points in all the digits indicate a negative 5-digit value. Some displays have a prefix character. If the value is full-scale, then the prefix character can be omitted.

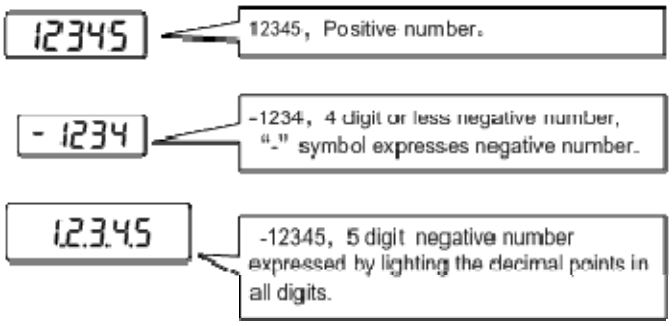

3.2 Main menu

The first layer is the main menu and has four operating modes. Pressing 8 or 2 button changes the operation mode. Pressing the 5 button enters the second layer and then executes a concrete operation. Pressing 4 button returns to the main menu from the second layer.

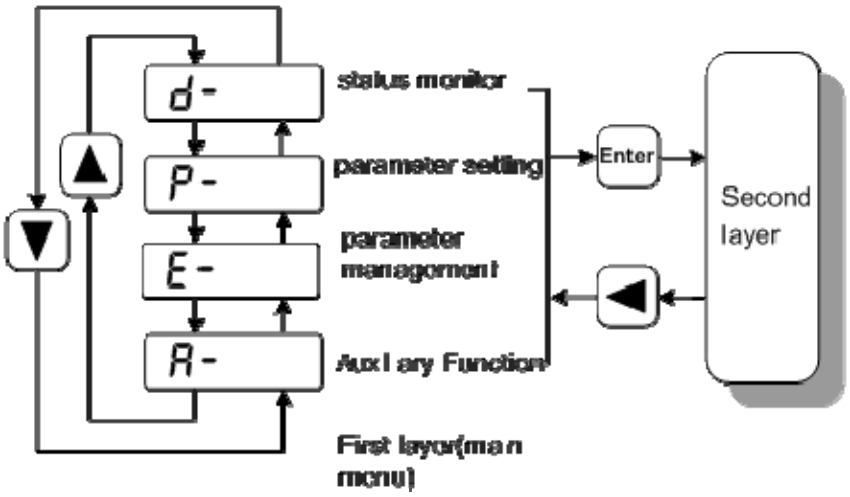

3.3 Status monitor

Choose status monitor “d-’’under the main menu. Pressing the 5 button enters the monitor mode. There are many kinds of monitor's project; Use 8 and 2 buttons to select the needing project. Pressing the 5 button again enters the concrete status display.

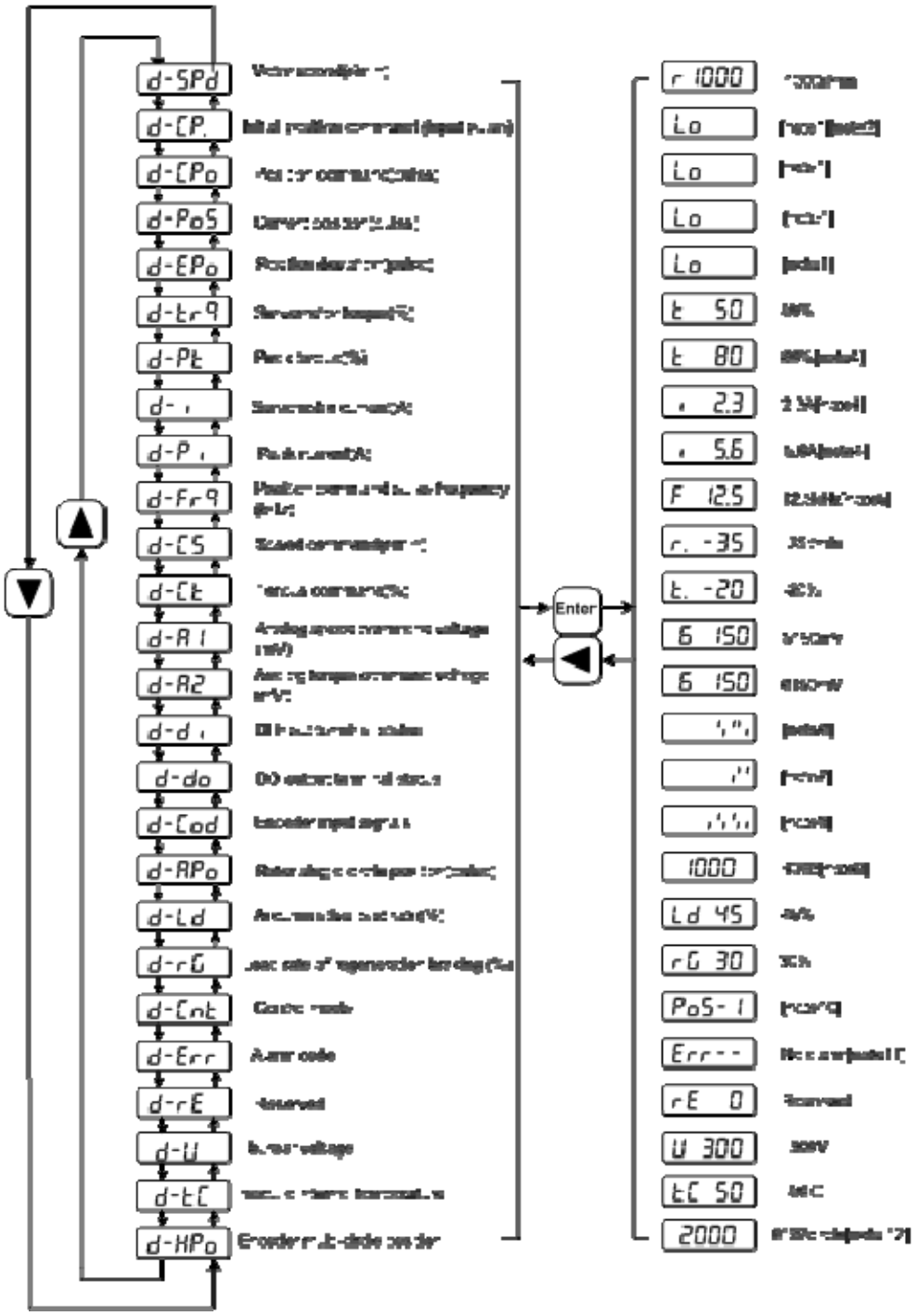

1. Binary bits value display [note1]

32 binary bits value translates into a decimal value that is in the range of -2147483648~147483647. It is divided into the low portion and the top portion. Use '8' and '2' button to select the needing portion through the menu. By the following formula, the complete

value can be obtained.

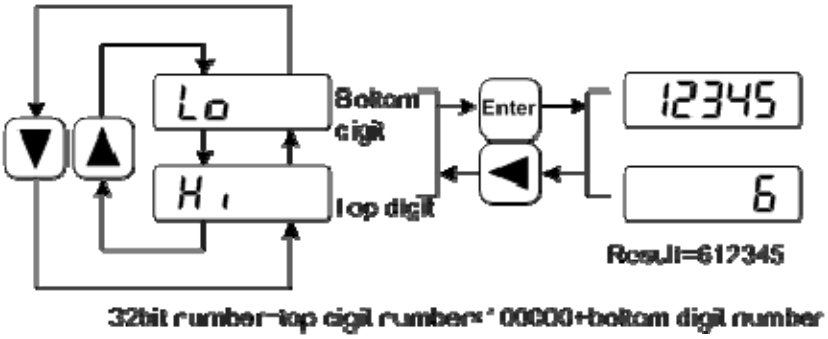

2. Pulse unit [note2]

The original position command pulse is the input pulse count that has not transformed through the electronic gear. The pulse count unit for other parts is the same with the encoder pulse unit. Take a 2500 lines encoder as the example.

$$\begin{aligned}\text{Encoder pulse unit} &= \text{encoder resolution}\\ &= 4\times\text{encoder line}\\ &= 4\times 2500(pulse/rev)\\ &= 10000(pulse/rev)\end{aligned}$$

3. Motor current [note3]

The servomotor current is Irms.

4. Peak torque and peak current [note4]

The maximum torque and maximum Irms of the servomotor in previous 10-second duration is defined as the peak value.

5. Position command pulse frequency [note5]

The frequency of position command pulse is the actual pulse frequency before the electronic gear. The positive number is shown as positive direction and the negative number as reverse direction.

6. Input terminals DI [note6]

A vertical segment of LED shows an input status. The lit top vertical segment shows the DI input to be “ON” and the lit bottom vertical segment to be “OFF”.

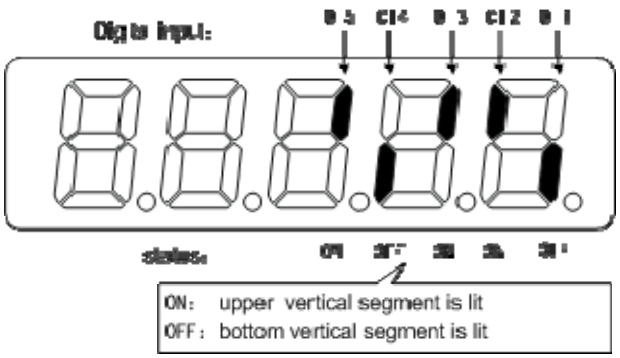

7. Output terminals DO [note7]

A vertical segment of LED shows an output status. The lit top vertical segment shows the DO output to be “ON” and the lit bottom vertical segment to be “OFF”.

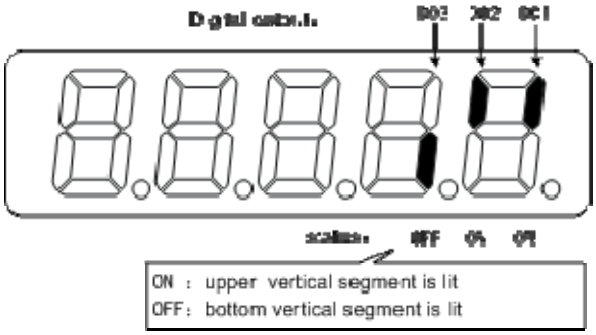

8. Input signals from encoder [note8]

A vertical segment of LED shows an input status. The lit top vertical segment shows a HIGH-level signal and the lit bottom vertical segment a LOW-level signal. (Note: It means nothing for the absolute encoder.)

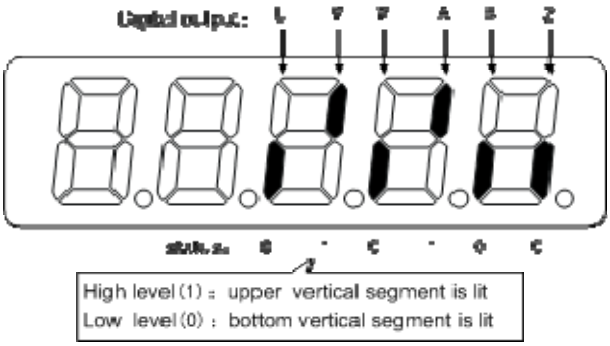

9. Single circle position of rotor [note9]

The rotor position is relative to the stator in one revolution per cycle. Use the encoder minimum resolution as unit and take the encoder Z pulse as the zero point.

2500 lines encoder: the range is 0~9999 (decimal system). It is 0 when Z pulse appears.

Absolute encoder: the range is 0～1FFFF (hexadecimal system), which indicates by high or low position.

Resolver encoder: the range is 0~65535 (decimal system). It is 0 when Z pulse appears.

10. Control mode [note10]

The first three characters show the control mode, the final character shows gain group.

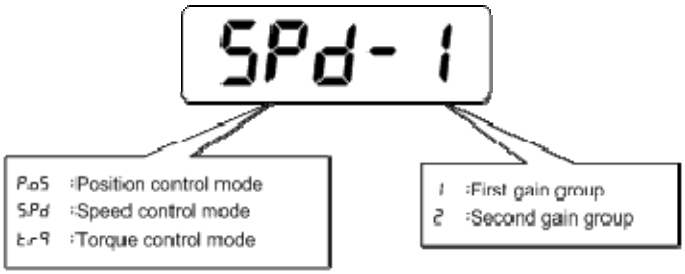

11. Alarm code [note11]

The " Err " followed by two minus symbols indicates no alarm and by digital number indicates an error code number that is flickering. When alarm appears, the error code number displays automatically on the front panel LED. During the error status, the monitor mode can be changed to other mode by pressing buttons, but the decimal point of the last LED is still flickering and shows existence of an alarm.

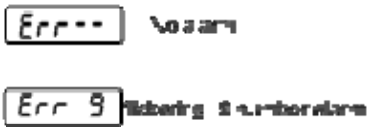

12. Multi-turn position of encoder [note12]

This display is only valid for absolute drive. Recording the multi-turn position of encoder and coordinating with the single-ring absolute position of Apo rotor can work out the absolute position of the rotor.

Absolute position = multi-turn position × absolute encoder bits + single-ring position

For example: multi-turn position shows 2000. Single-ring position shows 1000. Both of them are hexadecimal.

Then the absolute position of encoder is $(2000\times2^{17}+1000)$（hexadecimal）=40001000

Converting it as decimal number is 1073745920

When the absolute encoder is set as single-ring mode（P090=0), the multi-turn position shows 0 and it will not alter as the change of rotor’s position.

3.4 Parameters setting

The parameter number expression uses a parameter section name combined with a parameter name. The three figures are the section name and two figures and one figure are the parameter name. Take P102 parameter as an example, '**1**' is the section name and '**02**' the parameter name. "P-102" displays on the front panel LED.

Choose the parameter mode under the main menu " P- ". Pressing the 5 button enters the parameter-setting mode. First use 8 or 2 button to select the parameter section name and then pressing 5 button enters the parameter name selection. Again, use 8 or 2 button to select the parameter name and then pressing '5' button shows the parameter value.

Use 8 or 2 button to alter a parameter value. Pressing 8 or 2 button once to increase (decrease) the parameter value by one. Pressing down and hold the 8 or 2 button, the parameter value can increase (decrease) continuously. When the parameter value is modified, the decimal point on the most right sides LED is lit. Press 5 button to confirm the parameter value to be effective, meanwhile the decimal point turns off. The modified parameter value is immediately active to influence on the control action (but some parameters needs to preserve firstly and then turn off and on the power supply). Hereafter pressing 4 button returns to the parameter number selection and can continue to modify a parameter. If the value is not satisfied, do not press the 5 button and can press 4 button to cancel it for resuming the original parameter value.

The modified parameter did not preserve in EEPROM. For permanent preservation, please refer to the parameter writing operation in the parameter management (3.5 sections). The parameter section name and the parameter name are not necessarily continual, but the parameter section name and the parameter name that are not in use will be jumped over and cannot be chosen.

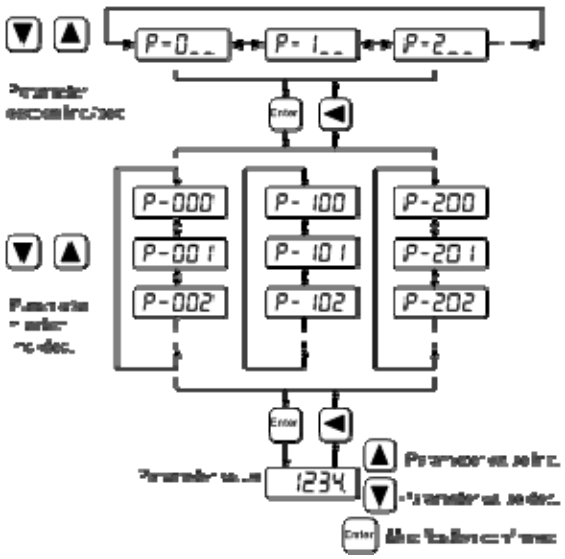

3.5 Parame ter management

Choose the parameter management mode under the main menu " E- ". Pressing the 5 button enters the parameter management mode. The operation is performed between parameter list and the EEPROM.

There are three operation modes. Use 8 or 2 button to select an operation mode and then pressing down and hold the 5 button at least three seconds to active the operation mode. After finished the operation and then pressing 4 button returns to the operation mode selection.

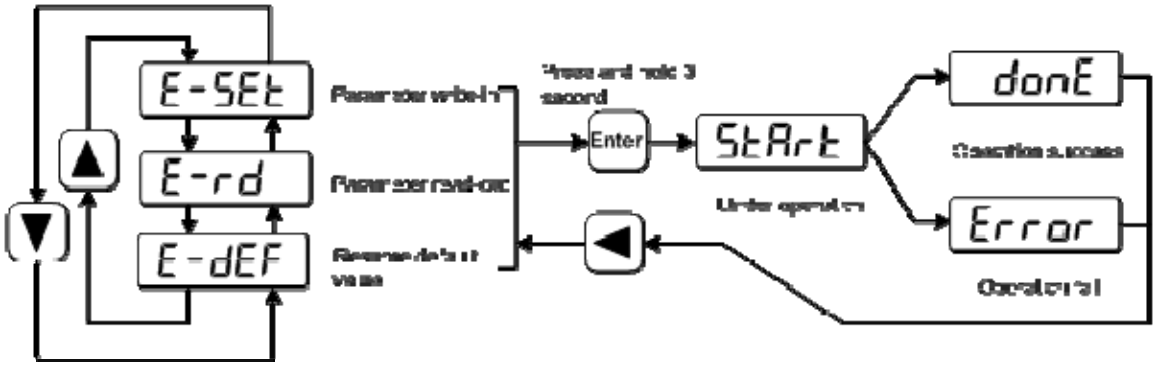

- **Write and save parameters**

  This operation indicates that the parameter in parameter list will write to the EEPROM. When user has made change to a parameter, it only change the parameter value in parameter list, but for the next time when the power supply is on the parameter value will restore its original value. Making permanent change to a parameter value, it is the need to carry out the parameter write operation and write the parameter value to the EEPROM. Hereafter, when the power supply is on again will be able to use the new parameter value.

- **Resume default value**

  This operation indicates that each default value of all the parameters will read from EEPROM and write to the parameter list and EEPROM. For the next time when power supply is on the default parameters will be used by now. When many parameters become confusion and cause abnormal operation, it is necessary to carry out this operation for resuming the default parameters. There are different default parameters for different servo driver model and the servomotor model. Therefore, before doing this operation the servomotor code (Parameter P002) must be selected correctly.

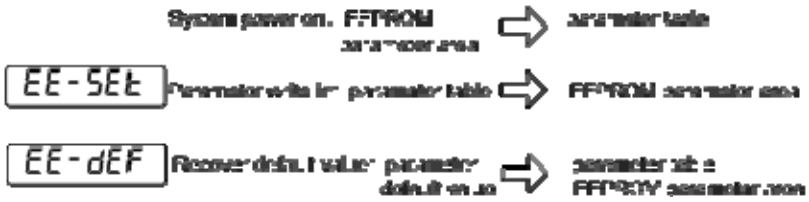

3.6 Auxiliary functions

Choose the auxiliary function mode " A- " under the main menu. Pressing the 5 button enters the auxiliary function mode. Use 8 or 2 button to select an operation mode. Then pressing the 5 button again enters the corresponding function. After finished this operation pressing the 4 button returns to the operation mode selection.

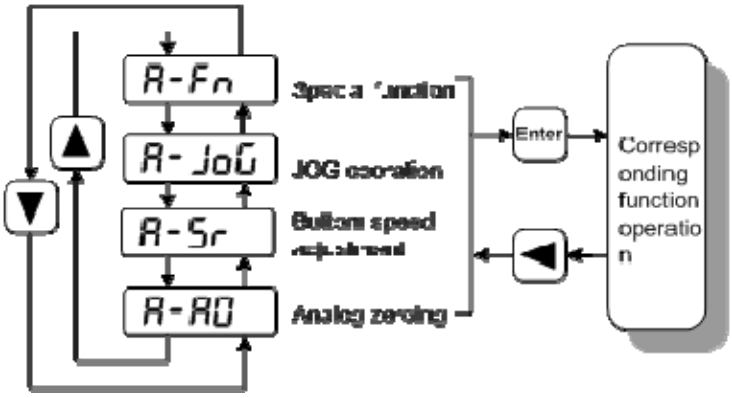

3.6.1 Special functions

Choose the special functions, and press the button 5 to enter. Use the button 8 and 2 to set the function code, and then pressing down and hold the 5 button at least three seconds to active the operation mode. After finished the operation and then pressing ◀ button returns to the operation mode selection.

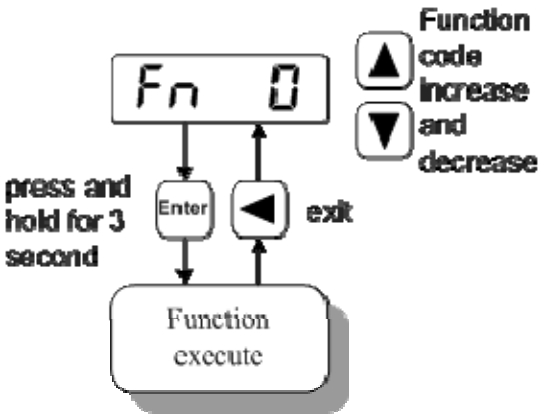

Fn number	functions	explanation
Fn36	reset the encoder Multi-turn absolute encoder is valid	The RESET command of encoder is used for encoder initialization, encoder alarm reset and multi-turn information return-to-zero. This function should be executed when the battery is replaced.

3.6.2 Zeroing for analog quantity

Using this operation, the servo driver automatically examines analog zero-bias and writes in the zero-bias value parameter P047 (or P054).This operation already preserved the zero-bias parameter in the EEPROM, therefore did not need to carry out the parameter write operation again.

Choose the analog zeroing "A-A0" of the auxiliary function. Pressing the 5 button enters the analog zeroing modes. First, use 8 and 2 button to select a function mode. Then pressing down and hold the 5 button at least three seconds to active the operation mode. After finished the operation and then pressing 4 button returns to the operation mode selection.

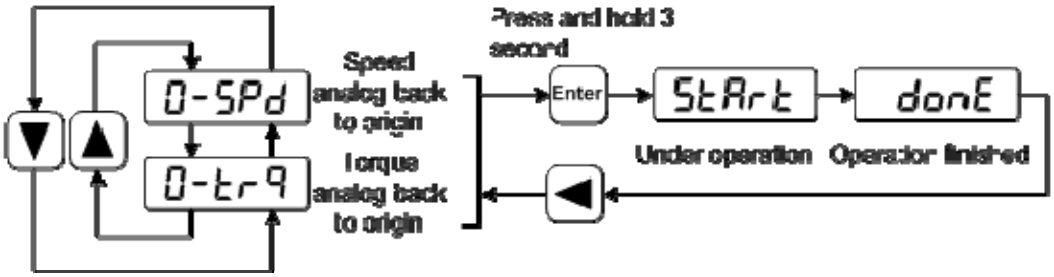

3.7 Resume the parameter default values

In case of the following situation, please use the function of resuming the default parameter (manufacture parameter):

- The parameter is adjusted chaotically, the system is unable the normal work.
- The servomotor is replaced by a different newly model.
- For any other reason, the servo driver code (parameter P001) does not match with the servomotor code (parameter P002)

The procedures for resuming the default parameter values are as the followings:

1. Inspection servomotor code (parameter P002) whether it is correct or not. If it is correct, carrry out the strep 4. If it is not correct, carry out the following step.
2. Modify the password (parameter P000) by 360.
3. Modify the servomotor code (parameter P002) with newly servomotor code, referring to chapter 8.4 servomotor adaptive table.
4. Enter the parameter management, carries out one of following operations:

(1) Resume a part of the parameter default value

For resuming default parameters related to the servo driver and the servomotor and maintaining the other user parameters, carry out the parameter write operation in the parameter management. This operation is active only in that the password was 360 and the servomotor code was modified. In other situations, it only has the parameter write function.

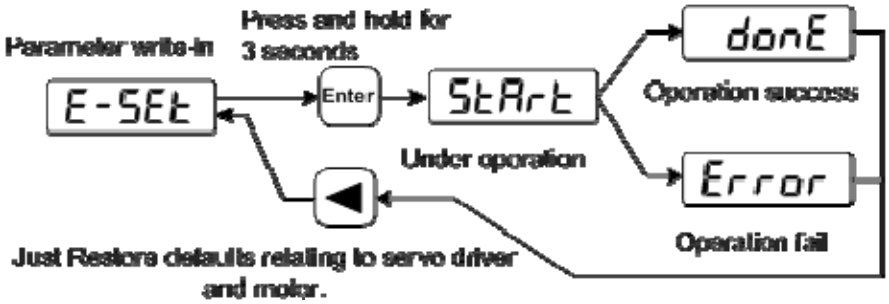

(2) Resume all of the parameter default value

Carry out to resume the default value in the parameter management, all the parameters including the parameter modified by the user become the default value.

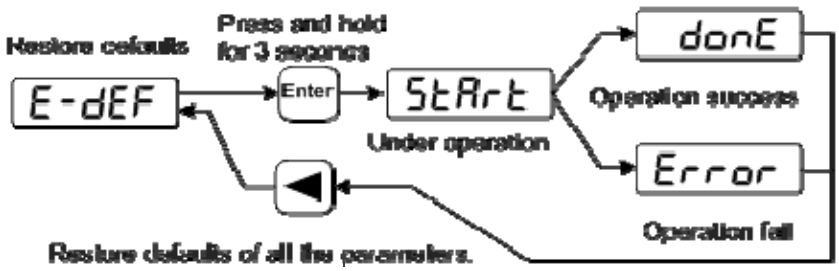

6. Turn off and on the power supply, then an operation can be performed again.

Remarks

Chapter 4 Running

4.1 Trial running with no load

The goal of trial running is confirming the following items that are correct or not:

- The servo driver power supply wiring;
- The servomotor wiring;
- The encoder wiring;
- The running direction and the servomotor speed

4.1.1 Wiring and inspection

Before turn on the power supply, confirms the servomotor:

- The servomotor has no loading on the shaft; decoupling from the machinery if already coupled.
- Because the servomotor has an impact during acceleration or deceleration, therefore the servomotor must be fixed.

Follow the wiring chart, inspects the following items before turning on the power supply:

- The wirings are correct or not. In particular, L1, L2, L3 wirings and U, V, W wirings corresponding to the servomotor U, V, W are correct or not.
- The input voltage is correct or not.
- The encoder cable connection is correct or not.

4.1.2 Trial running in JOG mode

1. Turn on power supply

Turn on the control power supply (while the main power supply temporarily turned off). The front panel display is lit. If any error appears, please inspect the wirings. Then turn on the main power supply, the POWER indicating LED is lit.

2. Parameter setting

Set parameters according to the following table:

Parameter	Name	Setting value	Default value	Parameter explanation
P004	Control mode	1	0	Set speed control
P025	Source of speed command	3	0	Set JOG source
P060	Acceleration time of speed command	suitable	0	Decrease acceleration impact
P061	Deceleration time of speed command	suitable	0	Decrease deceleration impact
P076	JOG running speed	100	100	JOG speed
P097	Neglect inhibition of servo driver	3	3	Neglect CCW inhibition (CCWL) and CW inhibition (CWL).
P098	Forced enable	1or 0	0	Set ‘1’for forced enable; Set ‘0’for external enable.
P100	Digital input DI1 function	1	1	Set DI1 for servo enable (SON)

3. Operation

Confirming that there is no alarm and any unusual situation, turn on the servo enable (SON), the RUN indicating LED lit and the servomotor is active at zero speed.

Choose the JOG running "A-JOG" in the auxiliary function. Pressing the button 5 to enter the JOG running mode. The symbol of JOG is “J”, and the unit is r/min. The speed command is provided by the button. Pressing down and hold the button 8, the servomotor will rotate in counterclockwise direction with the JOG speed. Loosen the pressed button, the servomotor stops and keeps zero speed. Alternatively, pressing down and hold the 2 button, the servomotor will rotate in clockwise direction with the JOG speed. The JOG speed is provided by P076 parameter

4.1.3 Trial running in speed adjustment mode with keyboard

1. Turn on power supply

Turn on the control power supply (while the main power supply temporarily turned off). The front panel display is lit. If any error appears, please inspect the wirings. Then turn on the main power supply, the POWER indicating LED is lit.

2. Parameter setting

Set parameters according to the following table:

Parameter	Name	Setting value	Default value	Parameter explanation
P004	Control mode	1	0	Set speed control
P025	Source of speed command	4	0	Set BUTTON source
P097	Neglect inhibition of servo driver	3	3	Neglect CCW inhibition (CCWL) and CW inhibition (CWL).
P098	Forced enable	1or 0	0	Set ‘1’for forced enable; Set ‘0’for external enable.
P100	Digital input DI1 function	1	1	Set DI1 for servo enable (SON)

3. Operation

Confirming that there is no alarm and unusual situation, turn on the servo enable (SON), the RUN indicating LED lit and the servomotor is active at zero speed.

Choose the adjustable speed "A-Sr" in the auxiliary function. Pressing the 5 button enters the adjustable running mode. The numerical value is the speed command provided by pressing '8' button (for increasing) or '2' button (for decreasing) and the unit is 0.1r/min. Following the speed command, the servomotor is in rotation. The rotation direction is dependent on the sign of digits. The positive number indicates positive direction (CCW) and the negative number indicates reverse direction (CW).

4.2 Position control mode

The position control applies in systems that need to locate precisely, such as numerical control machine tool, textile machinery and so on. The position command is a pulse serial coming from the input terminals PULS, PULS-, SIGN and SIGN- .

4.2.1 Simple example for position control mode

This is a simple example of positioning control. The wiring diagram is as below.

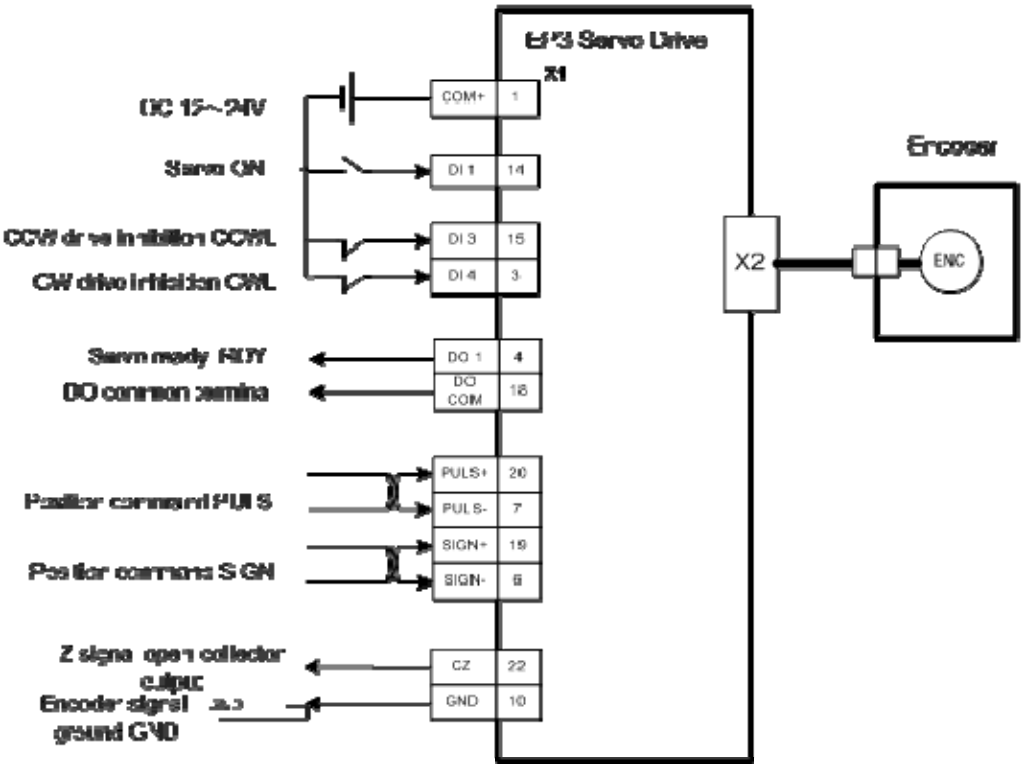

Parameter setting of the example：

parameter	Name	Setting value	Default value	Parameter explanation
P004	Control mode	0	0	Set position control
P097	Neglect inhibition of servo driver	0	3	Use CCW inhibition (CCWL) and CW inhibition (CWL). If neglect,did not connect CCWL、CWL
P100	Digital input DI1 function	1	1	Set DI1 for servo enable (SON)
P130	Digital output DO1 function	2	2	Set DO1 for servo is ready(RDY)

4.2.2 Position commands

1. Parameters related to position command

Parameter	Name	Range	Default value	Unit	Usage
P027	Encoder pulse factor 1 [note 1]	1～32767	10000		P
P028	Encoder pulse factor 2 [note 1]	1～32767	1		P
P029	1st numerator of electronic gear	1～32767	1		P
P030	Denominator numerator of electronic gear	1～32767	1		P
P031	2nd numerator of electronic gear	1～32767	1		P
P032	3rd numerator of electronic gear	1～32767	1		P
P033	4th numerator of electronic gear	1～32767	1		P
P035	Input mode of command pulse	0～2	0		P
P036	Phase of input command pulse	0～1	0		P
P037	Signal logic of input command pulse	0～3	0		P
P038	Signal filter of input command pulse	0～21	7		P
P039	Filter mode of input command pulse	0～1	0		P
P040	Time-constant of exponential form filter for position command	0～1000	0	ms	P
P089	Resolution ratio of resolver	0～3	0		ALL

Note 1: Absolute and resolver type servo driver are valid. In default (the electronic gear ratio is 1:1), the command pulse number needed for motor rotating one circle = P027×P028.

In this example, the primitive resolution ratio of 17 bits absolute type is 2^{17}=131072. Users need to make sure the result of P027×P028 is not more than 131072.

The resolution ratio of resolver depends on parameter P089. Users need to make sure the result of P027×P028 is not more than the resolution ratio set by P089.

2. Transmission path of command pulse

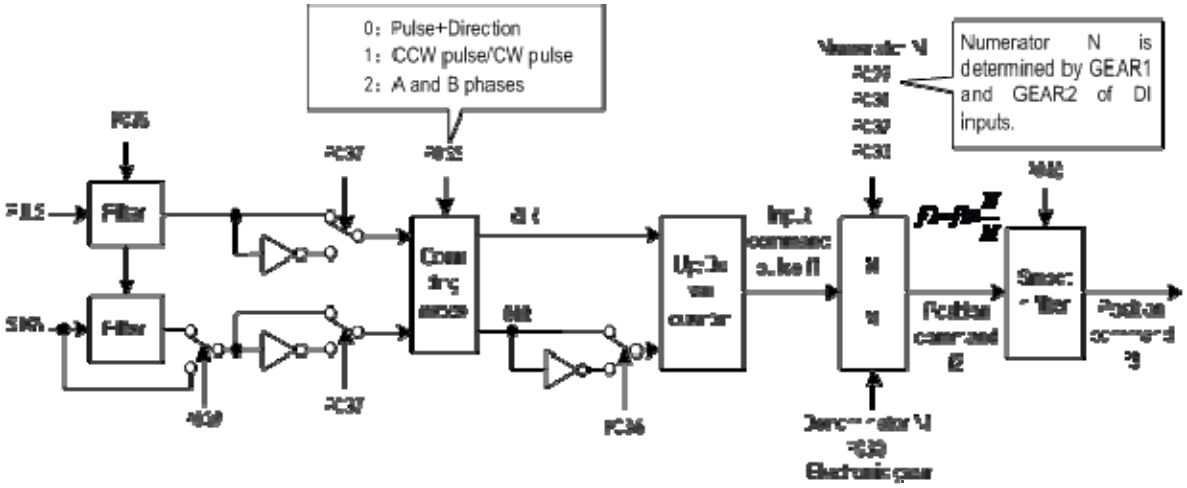

3. Input mode of command pulse

The command pulse input mode is dependent on the parameter P035. For adjusting the counting edge of a pulse, the parameter P037 sets the phases of the PULS and the SIGN signals. Parameter P036 uses in changing the counting direction.

Command pulse type	CCW	CW	Parameter P035
Pulse+Dir	PULS SIGN		0
CCW pulse/CW pulse	PULS SIGN		1
Orthogonal pulse	PULS SIGN		2

Note: The arrow indicates the counting edge with P306=0 and P307=0.

4. Timing chart specifications of command pulse

Pulse waveform of position command	Parameter demand	
	Differential	Single end
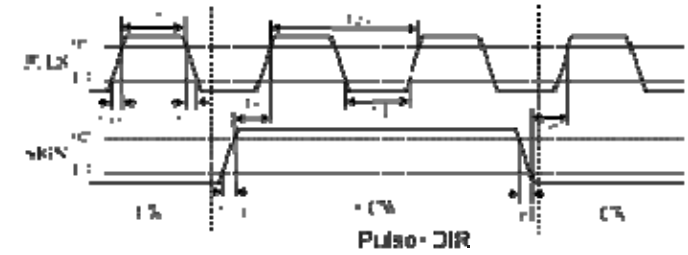	t_{ck}>2μs t_h>1μs t_l>1μs t_{rh}<0.2μs t_{rl}<0.2μs t_s>1μs t_{qck}>8μs t_{qh}>4μs t_{ql}>4μs t_{qrh}<0.2μs t_{qrl}<0.2μs t_{qs}>1μs	t_{ck}>5μs t_h>>2.5μs t_l>>2.5μs t_{rh}<0.3μs t_{rl}<0.3μs t_s>2.5μs t_{qck}>10μs t_{qh}>5μs t_{ql}>5μs t_{qrh}<0.3μs t_{qrl}<0.3μs t_{qs}>2.5μs
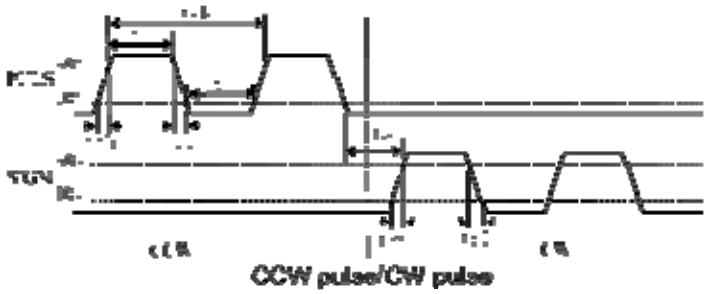		
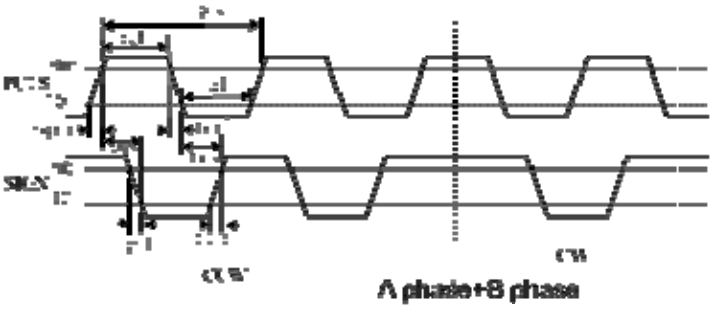		

5. Signal filter

Numeral filters related to the parameter P038 will filter the input signal PULS and SIGN. The bigger the P308 value, the larger filter time-constant and the lower maximum repeated frequency of input pulse. If P038 is the default value, the maximum repeated frequency of input pulse will reach 500 kHz (kpps).

If the positioning is not accurate, increase the parameter P038 in order to filter noise on the signal cable and to avoid counting error. The SIGN filter can close by parameter P039 setting.

6. Smooth filter

The parameter P040 carries on the smooth filter to the command frequency. It has the exponential form for acceleration and deceleration as showing in the following chart. The filter cannot lose any input pulse, but can delay its action time. When P040 is zero, the filter does not have any effect. The parameter value indicates the time in which the repeated frequency increases from 0 to 63.2% command frequency.

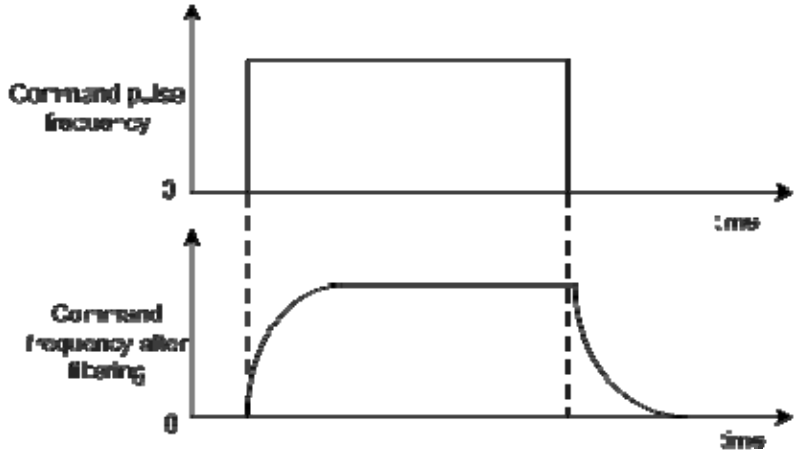

The filter makes the input repeated frequency smooth. This filter is used in the following situations: the host controller is without acceleration and deceleration function; the electronic gear ratio is quite big; the command frequency is lower.

4.2.3 Electronic gear for input commands

Through the electronic gear user can define that one input command pulse will cause an adjustable movement of mechanical device. Therefore, the host controller does not have to consider that the gear ratio in the mechanical system and the encoder line number of the servomotor .The electronic gear variable is illustrated in the following table.

Variable	Explanation	Value of this driver		
		Incremental type	Abosolute type	resolver
C	Lines of encoder	2500 lines	17 bits	10～16bits（P089）
P_t	The needed pulse number (pulse/rev) that the encoder rotates for one circle by default (the electronic gear ratio is 1:1)	=4×*C* =4×2500 =10000(pulse/rev)	P027×P028 =10000×1 =10000(pulse/rev)	P027×P028 =10000×1 =10000(pulse/rev)
R	Ratio of reducer	*R=B/A*, here *A*： servomotor trun number； *B*：The load axis trun number	the same as incremental type	the same as incremental type
ΔP	One command pulse travel equivalent			
P_c	command pulse numbers for one turn of the load shaft			
Pitch	Pitch of ball bearing screw (mm)			
D	Diameter of rolling cylinder (mm)			

Calculating formula：

$$\text{Electronic gear ratio } \frac{N}{M} = \frac{\text{Resolution in one turn of encoder(Pt)}}{\text{Command pulse number in one turn of load shaft(Pc)} \times \text{reducer ratio(R)}}$$

Here,

$$\text{Command pulse number in one turn of load shaft (Pc)} = \frac{\text{Movement quantity in one turn of load shaft}}{\text{Movement quantity in one command pulse}}$$

The calculated result will be abbreviated and make the numerator and the denominator smaller or equal to 32767 integer values. At last, the result must be in the range of 1/50<N/M<200 and write to the parameter list.

1. Electronic gear is used for ball screw drive

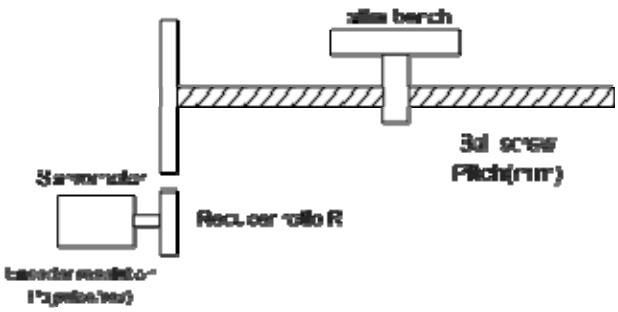

The ball bearing screw load has

$$\text{Electronic gear ratio}(\frac{N}{M}) = \frac{P_t}{P_c \times R}$$

Here,

$$P_c = \frac{Pitch}{\Delta P}$$

Take the incremental encoder as the example：

Known the encoder line number C=2500 line, the reducer gear ratio 1/1, pitches Pitch=8mm, a pulse travel equivalent ΔP=0.001mm. Calculate the electronic gear ratio.

Calculation step：

- Calculate the resolution of the encoder (P_t)

$$P_t = 4 \times C = 4 \times 2500 = 10000 (pulse/rev)$$

- Calculate the command pulse numbers for one turn of the load shaft (ball-screw) (P_c)

$$P_c = \frac{Pitch}{\Delta P} = \frac{8mm}{0.001mm} = 8000$$

- Calculate the electronic gear ratio.

$$\text{Electronic gear ratio}(\frac{N}{M}) = \frac{P_t}{P_c \times R} = \frac{10000}{8000 \times (1/1)} = \frac{5}{4}$$

- Set parameters (By first numerator as an example)

  Numerator N=5, denominator M=4, set P029=5and P030=4。

2. Electronic gear is used for graduator drive

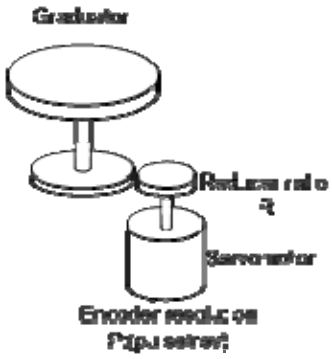

The graduator load has

$$\text{Electronic gear ratio}(\frac{N}{M}) = \frac{P_t}{P_c \times R}$$

Here,

$$\mathrm{P_c} = \frac{360^\circ}{\Delta P}$$

Take the absolute encoder for example:

Known that the encoder bit C=17 bits, the reducer gear ratio 1/3, a pulse travel equivalent ΔP=0.1°Calculate the electronic gear ratio.

Calculation step:

- Calculate the resolution of the encoder (P_t)

$$\mathrm{P_t} = \mathrm{P027} \times \mathrm{P028} = 10000 \times 1 = 10000(pulse/rev)$$

- Calculate the command pulse numbers for one turn of the load shaft (P_c)

$$\mathrm{P_c} = \frac{360^\circ}{\Delta P} = \frac{360^\circ}{0.1^\circ} = 3600$$

- Calculate the electronic gear ratio

$$\text{Electronic gear ratio}(\frac{N}{M}) = \frac{P_t}{P_c \times R} = \frac{10000}{3600 \times (1/3)} = \frac{30000}{3600} = \frac{25}{3}$$

- Set parameters (By first numerator as an example)
  Numerator N=25，denominator M=3，set P029=25 and P030=3.

3. Electronic gear is used for conveyor belt drive

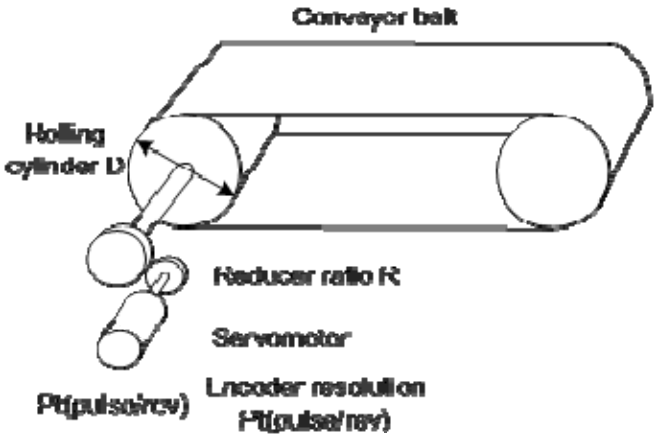

The conveyer belt load has

$$\text{Electronic gear ratio}(\frac{N}{M}) = \frac{P_t}{P_c \times R}$$

Here,

$$P_c = \frac{\pi D}{\Delta P}$$

For example:

Known that the encoder bit C=16 bits, the reducer gear ratio 1/10, the rolling cylinder diameter D=200mm, a pulse travel equivalent ΔP=0.001mm, Calculate the electronic gear ratio.

Calculation step:

- Calculate the resolution of the encoder (P_t)

$$P_t = P027 \times P028 = 10000 \times 1 = 10000(pulse/rev)$$

- Calculate the command pulse numbers for one turn of the load shaft (P_c)

$$P_c = \frac{\pi D}{\Delta P} = \frac{3.14 \times 200}{0.01} = 62800$$

- Calculate the electronic gear ratio

$$\text{Calculate the electronic gear ratio}(\frac{N}{M}) = \frac{P_t}{P_c \times R} = \frac{10000}{62800 \times (1/10)} = \frac{100000}{62800} = \frac{250}{157}$$

- Set parameters (By first numerator as an example)

  Numerator N=2500，denominator M=157，set P029=2500 and P030=157

4. The relation between the electronic gear ratio and the turn number of servomotor

The relation between the electronic gear ratio and the turn number of servomotor is:

$$\text{Servomotor turn number} = \frac{pulse \times N}{P_t \times M}$$

Among them, pulse is input pulse number. For example, the incremental encoder line number C=2500 line, N=20, M=3, pulse=1000, the calculation is:

$$\text{Servomotor turn number} = \frac{1000 \times 20}{10000 \times 3} = \frac{2}{3}(ring)$$

5. The relation between the electronic gear ratio and the speed of servomotor

The relation between the electronic gear and the speed of servomotor is:

$$\text{Servomotor speed}(r/\min) = \frac{f(Hz) \times 60 \times N}{P_t \times M}$$

Among them, f is the repeated frequency of the input pulse; unit is Hz (pps). For example, the encoder line number C=2500 line, N=3, M=1, f=100 kHz (kpps), the calculation is:

$$\text{Servomotor speed}(r/\min) = \frac{100 \times 10^3 \times 60 \times 3}{10000 \times 1} = 1800(r/\min)$$

6. Electronic gear ratio switching

Four groups of electronic gear numerator N are provided in the servo driver. The group can be changed online by signal of GEAR1 and GEAR2 from DI inputs. However, the denominator M is all the same.

DI signal[note]		Numerator of input electronic gear N	Denominator of input electronic gear M
GEAR2	GEAR1		
0	0	1st numerator(parameterP029)	Denominator (parameterP030)
0	1	2nd numerator(parameterP031)	
1	0	3rd numerator(parameterP032)	
1	1	4th numerator(parameterP033)	

Note: 0 indicates OFF; 1 indicates ON.

4.2.4 Gains related to position control mode

Parameter	Name	Range	Default value	Unit	Usage
P009	1st gain of position loop	1～1000	40	1/s	P
P013	2nd gain of position loop	1～1000	40	1/s	P
P021	Feed forward gain of position loop	0～100	0	%	P
P022	Time-constant of feed forward filter for position loop	0.20～50.00	1.00	ms	P

According to the inner loop adjusts first and then the outer loop, the speed loop is included in the position loop, therefore the rotation inertia ratio of load will be set first with suitable value. Then, the gain and the integral time-constant of the speed loop are adjusted. At last, the gain of the position loop is adjusted.

The following block diagram is the position regulator of the system. Increasing the gain of position loop can get higher position loop bandwidth, but it is limited by the speed loop bandwidth. Therefore, in order to increase the gain of the position loop must increase the bandwidth of speed loop first.

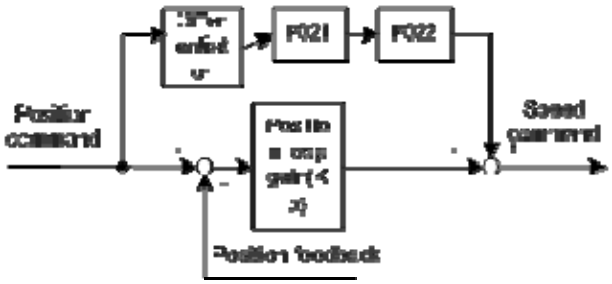

The feed forward can reduce the lagging of phase in the position loop; also reduce the position tracking error as well as shorter positioning time. The feed forward quantity increases, the position tracking error reduces, but can cause the system unstable and overshoot if the feed forward quantity is too large. If the electronic gear ratio is more than 10 it is also easy to make noise. For normal application, the parameter P021 is set as 0%. If higher response and lower tracking error are required, the P021 can be increased properly, but not in excess of 80%. Meanwhile it may need to adjust the filter time constant (parameter P022) of the feed forward branch.

4.3 Speed control mode

The speed control applies in the need of accurate-speed control situation, such as braider, drill, CNC machine. Also may construct a positioning control system with host controller.

4.3.1 Simple example for speed control mode

This is a simple example of speed control (speed command is an analog input). The wiring diagram is as below.

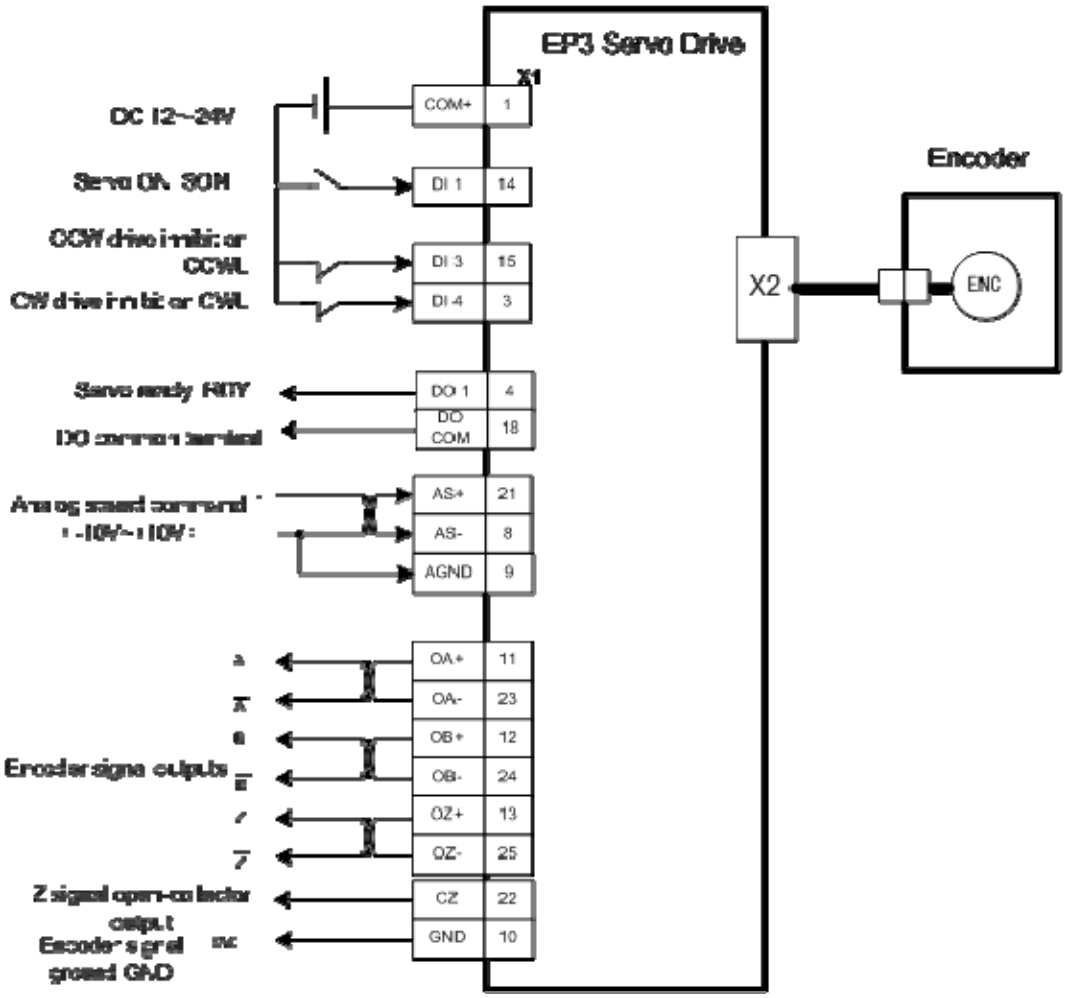

The parameter setting for the example:

Parameter	Name	Setting value	Default value	Parameter explanation
P004	Control mode	1	0	Set speed control
P025	Source of speed command	0	0	Set analog input
P060	Acceleration time of speed command	suitable	0	
P061	Deceleration time of speed command	suitable	0	
P097	Neglect inhibition of servo driver	0	3	Use CCW inhibition (CCWL) and CW inhibition (CWL). If neglect,did not connect CCWL、CWL
P100	Digital input DI1 function	1	1	Set DI1 for servo enable (SON)
P130	Digital output DO1 function	2	2	Set DO1 for servo is ready(RDY)

4.3.2 Parameters related to speed commands

The following table is the parameters related to the speed command:

Parameter	Name	Range	Default value	Unit	Usage
P025	Source of speed command	0～5	0		S
P046	Gain of analog speed command	10～3000	300	r/min/V	S
P047	Zero offset compensation of analog speed command	-1500.0～1500.0	0.0	mv	S
P048	Direction of analog speed command	0～1	0		S
P049	Time constant of filter for analog speed command	0.20～50.00	2.00	ms	S
P050	Polarity of analog speed command	0～2	0		S
P051	Dead zone 1 of analog speed command	0～13000	0	mv	S
P052	Dead zone 2 of analog speed command	-13000～0	0	mv	S
P076	Running speed of JOG	0～5000	100	r/min	S

4.3.3 Sources of the speed commands

The sources of speed command determined by parameter P025:

P025	Explanation	Interpret
0	Analog speed command	From terminal AS+ and AS- inputs analog voltage.
1	Internal speed command	Determine on SP1、SP2、SP3 of DI inputs [Note1]
2	Analog speed command + Internal speed command	Act as analog speed command when SP1, SP2, SP3 are OFF. The rest Determine on SP1、SP2、SP3 [Note2].
3	speed command	Set for JOG operation.

4	BUTTON speed command	Set for BUTTON adjust speed operation(Sr)
5	Demonstration speed command	Set for adjustable speed demonstration.

Note 1: inner speed command:

DI Signals			Speed command
SP3	SP2	SP1	
0	0	0	Internal speed 1 (parameter P137)
0	0	1	Internal speed 2 (parameter P138)
0	1	0	Internal speed 3 (parameter P139)
0	1	1	Internal speed 4 (parameter P140)
1	0	0	Internal speed 5 (parameter P141)
1	0	1	Internal speed 6 (parameter P142)
1	1	0	Internal speed 7 (parameter P143)
1	1	1	Internal speed 8 (parameter P144)

Note 2: analog speed command plus inner speed command:

DI Signals			Speed command
SP3	SP2	SP1	
0	0	0	Analog speed command
0	0	1	Internal speed 2 (parameter P138)
0	1	0	Internal speed 3 (parameter P139)
0	1	1	Internal speed 4 (parameter P140)
1	0	0	Internal speed 5 (parameter P141)
1	0	1	Internal speed 6 (parameter P142)
1	1	0	Internal speed 7 (parameter P143)
1	1	1	Internal speed 8 (parameter P144)

The mentioned above: 0 indicates OFF; 1 indicates ON. The inputs CZERO (the zero command) and CINV (command reverse) from DI can provide the special function, when CZERO is ON, the speed command will be forced to zero; When CINV is ON, the speed

command will reverse.

4.3.4 Acceleration and deceleration

The following parameters relate to acceleration and deceleration:

Parameter	Name	Range	Default value	Unit	Usage
P060	Acceleration time of speed command	0～30000	0	ms	S
P061	Deceleration time of speed command	0～30000	0	ms	S

Acceleration and deceleration can slow down the sudden change of speed and result in smooth movement of the servomotor. The following chart shows that the parameter P060 sets the acceleration time from zero to rated speed of the servomotor; the parameter P061 sets the deceleration time from rated to zero speed of the servomotor. If the command speed is lower than the rated speed, then the acceleration or deceleration time is also reduce correspondingly. If the servo driver constructs a positioning control system with host controller, these parameters should set zero.

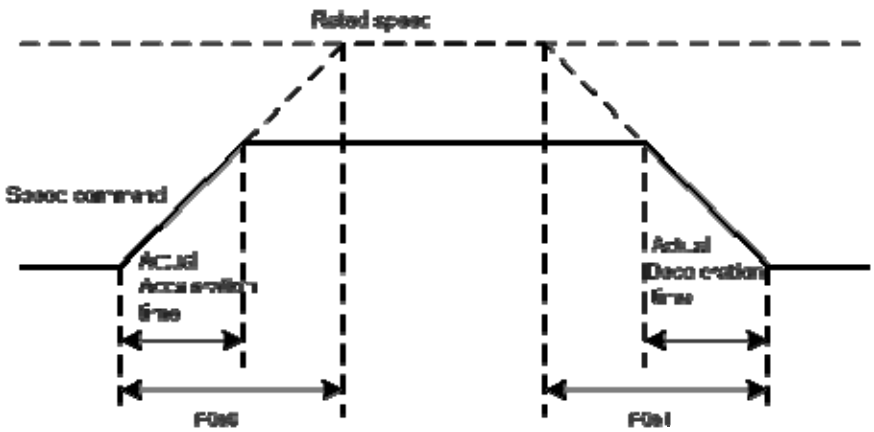

4.3.5 Clamp on zero speed

The parameters relate to zero speed clamp:

Para meter	Name	Range	Default value	Unit	Usage
P160	Check point for zero speed	0～1000	10	r/min	ALL
P161	Hysteresis for zero speed check	0～1000	5	r/min	ALL
P162	Zero speed clamp mode	0～1	0		S

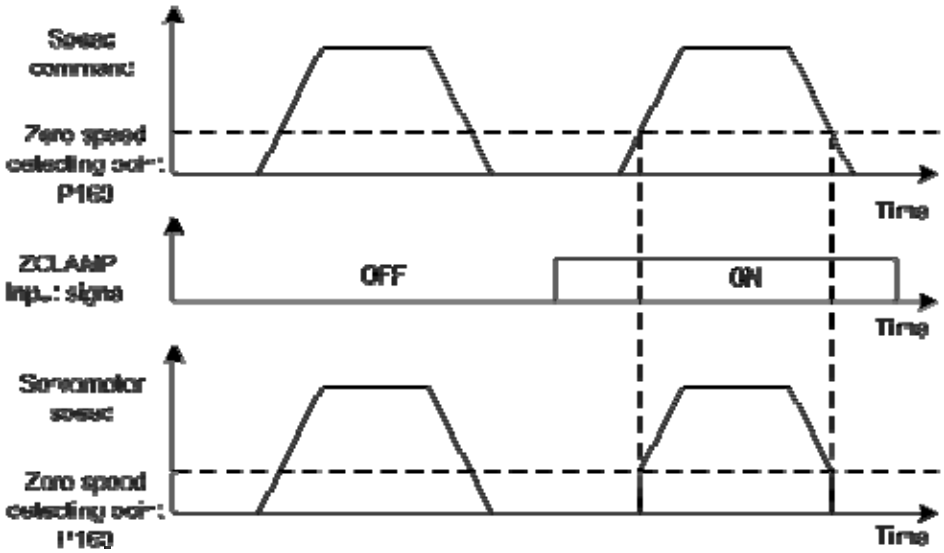

In the speed control mode, a position change may occur by an external force even if the servomotor is in zero speed. For analog speed command input, the absolute zero speed command is not easy to realize. In order to solve these two problems, a clamp function of zero speed can be used. Start the clamp function of zero speed when the following condition satisfies:

Condition 1: Speed mode.

Condition 2: ZCLAMP (zero speed clamp) of DI is on.

Condition 3: The speed command is lower than the parameter P160.

When any condition mentioned above does not satisfy, carries out the normal speed control. The zero speed clamp has two kind of mode:

P162	Explanation
0	The position of the servomotor is fixed just when the clamp function starts. This time the servo driver itself changes to the position control mode, and keeps the fixed point even if the external force causes displacement.
1	The speed command is forced to zero when the clamp function starts. The servo

	driver is still in the speed control mode, but the external force can cause revolving.

4.3.6 Gains related to speed control mode

Parameter	Name	Range	Default value	Unit	Usage
P005	First gain of speed loop	1～3000	40	Hz	P,S
P006	First integral time constant of speed loop	1.0～1000.0	20.0	ms	P,S
P010	Second gain of speed loop	1～3000	40	Hz	P,S
P011	Second integral time constant of speed loop	1.0～1000.0	20.0	ms	P,S
P017	Ratio of load inertia	0.0～200.0	1.0	times	P,S
P018	Control coefficient PDFF of speed loop	0～100	100	%	P,S

First sets a proper rotation inertia ratio of load, and then adjusts gain and integral time constant of speed loop. The diagram of speed control loop is as the following. To increase the gain Kv can enhance the speed response bandwidth. To reduce the integral time constant Ti can increase the system stiffness and reduce the static error.

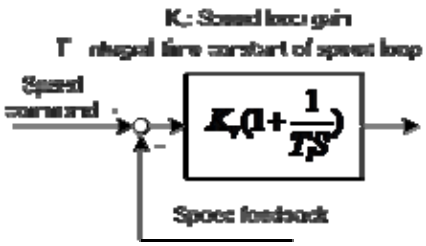

The speed controller structure can be selected by the value of parameter P018. The 0 and 100 number are stand for IP regulator and 1 to 99 number are stand for PDFF regulator. The larger the value of parameter P018, the higher frequency response of the system can get. The smaller the value of the parameter, the higher stiffness (anti-deviation ability) of the system will be. The medium value takes account to both frequency response and stiffness.

4.4 Torque control mode

The torque control mode is used in the situations such as printer, winding machine, injection-molding machine and so on. The output torque of servomotor is proportional to the input torque command.

4.4.1 Simple example for torque control mode

This is a simple example of torque control (torque command is an analog input). The wiring diagram is as below.

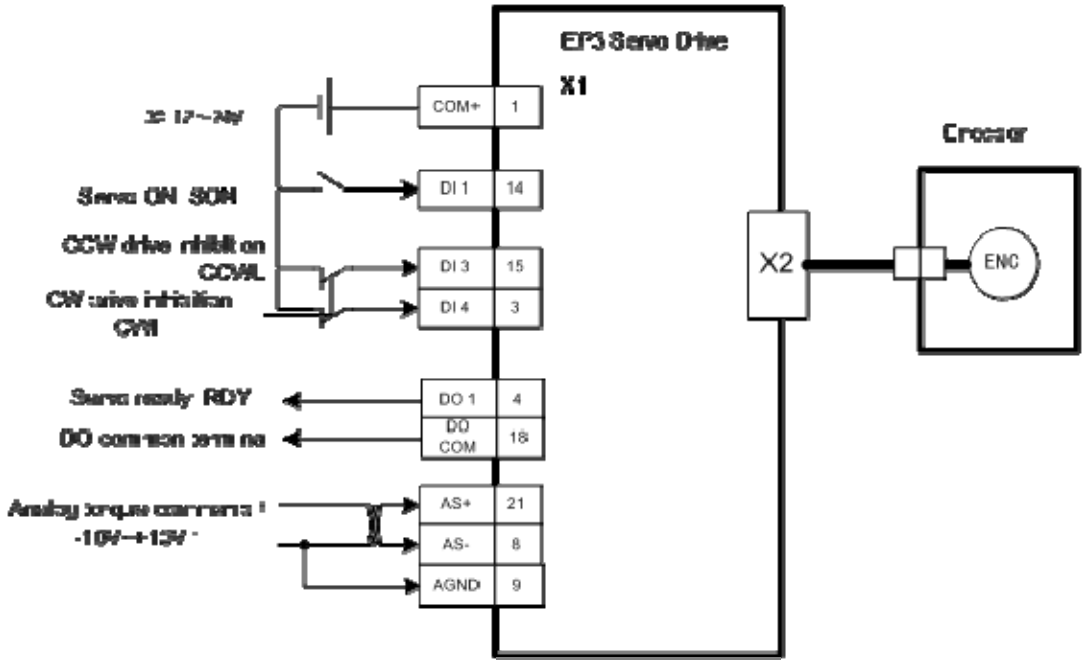

Parameter setting of example:

Parameter	Name	Setting value	Default value	Parameter explanation
P004	Control mode	2	0	Set for torque control.
P026	Source of torque command	0	0	Set for analog input
P097	Neglect inhibition of servo driver	0	3	Use CCW inhibition (CCWL) and CW inhibition (CWL). If neglect,did not connect CCWL、CWL
P100	Digital input DI1 function	1	1	Set DI1 for servo enable (SON).
P130	Digital output DO1 function	2	2	Set DO1 for servo is ready(RDY)

4.4.2 Parameters related to torque commands

The following table is the parameters related to the torque command:

Parameter	Name	Range	Default value	Unit	Usage
P026	Source of torque command	0～2	0		T
P053	Gain of analog torque command	1～300	30	%/V	T
P054	Zero offset compensation of analog torque command	-1500.0～1500.0	0.0	mv	T
P055	Direction of analog torque command	0～1	0		T
P056	Time constant of filter for analog torque command	0.20～50.00	2.00	ms	T
P057	Polarity of analog torque command	0～2	0		T

4.4.3 Sources of the torque commands

The sources of torque command determined by parameter P026:

P026	Explanation	Interpret
0	Analog torque command	From terminal AS+ and AS- inputs analog voltage.
1	Internal torque command	Determine on TRQ1、TRQ2 of DI inputs [Note1].
2	Analog torque command + Internal torque command	Act as Analog speed command when TRQ1, TRQ2 are OFF. The rest Determine on TRQ1、TRQ2 [Note2].

Note 1: inner torque command:

DI Signals		Torque command
TRQ2	TRQ1	
0	0	Internal torque 1(parameterP145)
0	1	Internal torque 2(parameterP146)
1	0	Internal torque 3(parameterP147)
1	1	Internal torque 4(parameterP148)

Note 2: analog torque command plus inner torque command:

DI Signals		Torque command
TRQ2	TRQ1	
0	0	Analog torque command
0	1	Internal torque 2(parameterP146)
1	0	Internal torque 3(parameterP147)
1	1	Internal torque 4(parameterP148)

The mentioned above: 0 indicates OFF; 1 indicates ON. The inputs CZERO (the zero command) and CINV (command reverse) from DI can provide the special function, when CZERO is ON, the torque command will be forced to zero; When CINV is ON, the torque command will reverse.

4.4.4 Speed limitation in torque control mode

In torque control mode, the torque output of the servomotor is controlled by torque command, but the speed of the servomotor is not controlled. Therefore, an over speed may occur if in light loading. The speed must be limited to protect the machinery. The parameters related to the speed limitation are:

Parameter	Name	Range	Default value	Unit	Usage
P077	Selection of speed limit	0～2	0		T
P078	Speed limit in torque control	0～5000	3000	r/min	T
P079	Speed limit error in torque control	1～5000	100	r/min	T

When appears over speed, use a negative speed feedback to reduce the actual torque and thus to reduce the actual speed. However, the actual speed can be higher than the limited value slightly. The value of the negative speed feedback is set by the parameter P079. The smaller the value of P079, the greater effect on the negative feedback can be and the steeper of limit speed curve shows. Therefore, the quantity of over speed is smaller, but the vibration becomes larger. In torque control mode, there are three kind of speed limitation as the following:

P077	Explanation	Interpret
0	Basic limit	Limited by parameter P078.
1	Basic limit +Analog limit	Except basic limit, it is also limited by analog speed command.
2	Basic limit +Internal speed limit	Except basic limit, it is also limited by internal speed command. The internal speed command is determined by SP1, SP2, and SP3 from DI inputs.

Note: 1. Speed limitation is not related to the rotation direction.

2. If many limits occur, the final limitation value will be the smallest value.

3. Even if the setting value greater than the permission maximum speed of the system, but the operation also can limit in the maximum torque range.

4. The internal speed command is determined by SP1, SP2, and SP3 from DI inputs.

Signal [Note]			Speed command
SP3	SP2	SP1	
0	0	0	Internal speed 1 (parameter P137)
0	0	1	Internal speed 2 (parameter P138)
0	1	0	Internal speed 13(parameter P139)
0	1	1	Internal speed 4 (parameter P140)
1	0	0	Internal speed 5 (parameter P141)
1	0	1	Internal speed 6 (parameter P142)
1	1	0	Internal speed 7 (parameter P143)
1	1	1	Internal speed 8 (parameter P144)

Note: 0 indicates OFF; 1 indicates ON.

4.5 Motion mode

Motion mode: the command may be consisted of one or more paths.

Entering into the motion mode: set the parameter P305 as 1; or set DI：MMODE as ON.

The path is triggered by （ DI：←CTRG）. And（DI：MDATA1～MDATA3）is used to appoint the path number of trigger. When the triggered path has been executed, it can point to the next path automatically and it will be triggered by （DI:CTRG）.The path number could be set. The delay time could be set between paths too.

4.5.1 The unit of motion mode

The position data of motion mode is all presented by the drive inner unit PEU（Pulse of Encoder Unit）.

The position unit (Pulse) of drive is the encoder unit.

Incremental type: 10000 pulse per rev（pulse/rev）

Absolute type: 131072 pulse per rev（pulse/rev）

Resolver type: 65536 pulse per rev (parameter P089 can be set)（pulse/rev）

4.5.2 Simple example for motion mode

This is a simple example for motion mode. The wiring diagram is as follows:

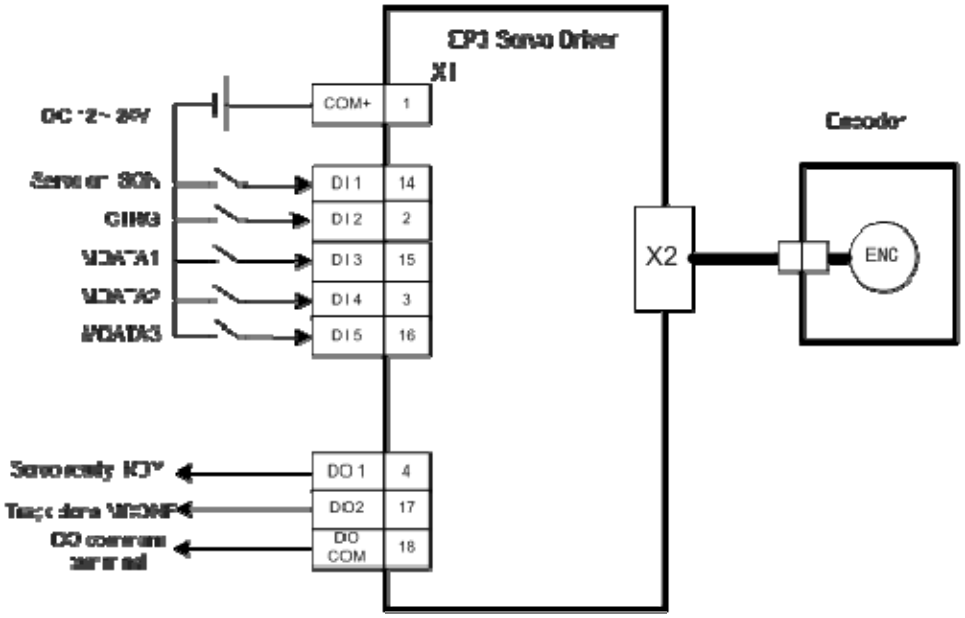

The IO description for this example is:

There are eight track procedures in motion mode in total, which can be defined by the users. The trigger command ways are concluded as follows:

DI：CTRG + MDATA1～MDATA3

Use the appointed trigger path number MDATA1～MDATA3 and then trigger the execution of the path by the rising edge DI: CTRG.

DO: after the path is finished and delayed according to the setting time, it outputs MDONE signal.

Applicable occasion: PC or PLC gives commander by DI.

4.5.3 The sequence diagram of motion mode

When the TYPE of path control word is 1, this path is position mode. The sequence diagram is as follows:

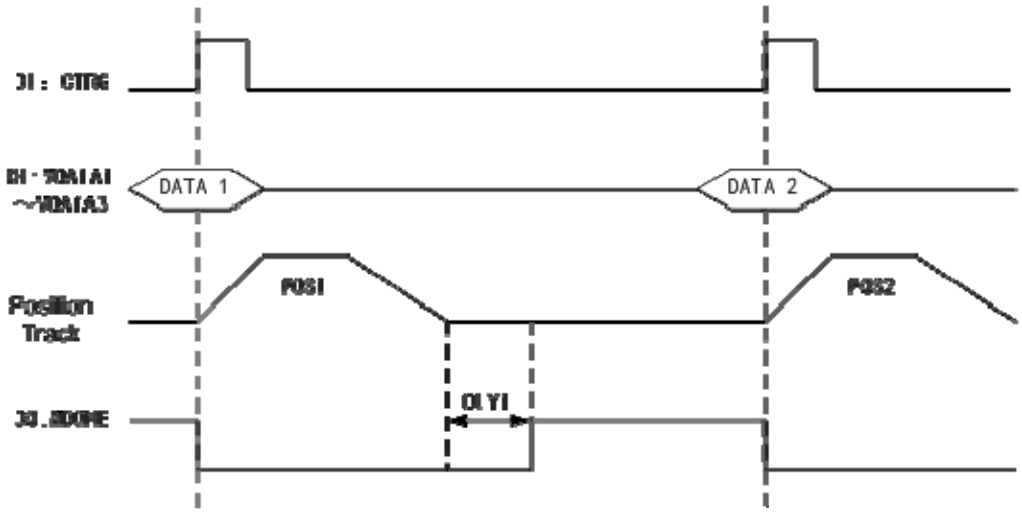

When the TYPE of path control word is 0, this path is speed mode. The sequence diagram is as follows:

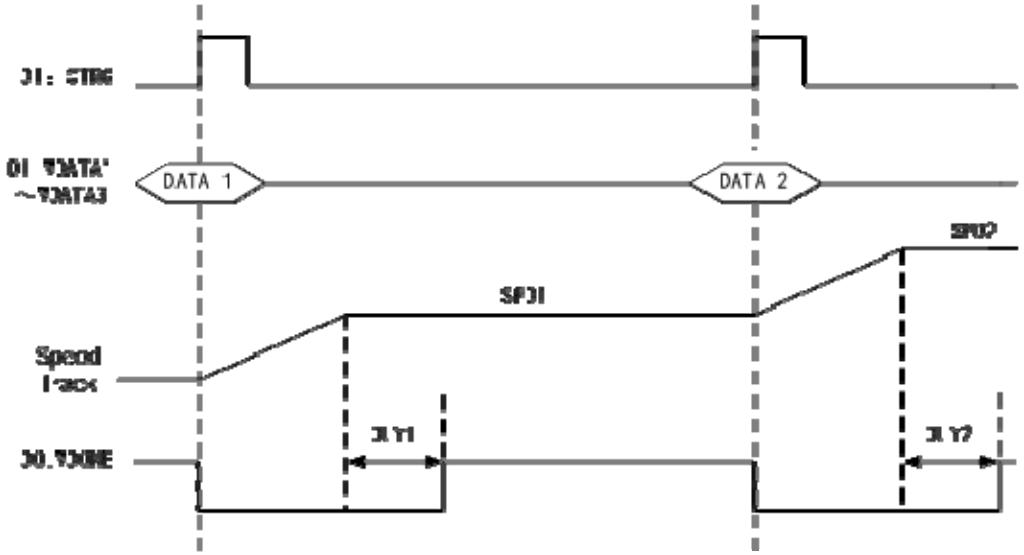

4.5.4 Parameter setting of motion mode

1. The motion path selection

It is decided by MDATA1、MDATA2、MDATA3 inputted from DI.

DI signal[note]			path selection
MDATA3	MDATA2	MDATA1	
0	0	0	path1(P400、P401；P500、P501)
0	0	1	path2(P402、P403；P502、P503)
0	1	0	path3(P404、P405；P504、P505)
0	1	1	path4(P406、P407；P506、P507)
1	0	0	path5(P408、P409；P508、P509)
1	0	1	path6(P410、P411；P510、P511)
1	1	0	path7(P412、P413；P512、P513)
1	1	1	path8(P414、P415；P514、P515)

Note: 0 indicates OFF, 1 indicates ON.

The detailed plan of path is decided by parameter P400～P415, and its target position is decided by P500～P515.

2. Definition for P400 parameter bit

15	14～12	11	10～8	7	6～4	3	2～0
NC	SPD	NC	DEC	NC	ACC	NC	DLY

	The	TYPE=0	TYPE=1

	corresponding parameter of control word	Speed track	position track
SPD	P310～P317	path target speed	Run to the set position with the set speed
DEC	P330～P337	The deceleration of path	The deceleration of path
ACC	P330～P337	The acceleration of path	The acceleration of path
DLY	P350～P357	The delay time when speed has reached	The delay time when position has reached

Note : when TYPE is 1, the speed chose by SPE is absolute speed, regardless of the sign of P310～P317 parameter .

The following diagram shows how to set SPD to choose the path of target speed. The set method is the same as DEC、ACC、DLY.

SPD			Path target speed
Bit 14	Bit 13	Bit 12	
0	0	0	Path target speed 1 (parameter P310)
0	0	1	Path target speed 2 (parameter P311)
0	1	0	Path target speed 3 (parameter P312)
0	1	1	Path target speed 4 (parameter P313)
1	0	0	Path target speed 5 (parameter P314)
1	0	1	Path target speed 6 (parameter P315)
1	1	0	Path target speed 7 (parameter P316)
1	1	1	Path target speed 8 (parameter P317)

3. Definition for P401 parameter bit

15	14～10	9～5	4～3	1	0
TYPE	NC	NPRC	CMD	NEXT	INS

TYPE： 0：This path is speed command.

1：This path is position command.

NPRC: choose next path when need to set automatic execurion（NEXT=1）

CMD: 0: absolute position localization command (take the position after DSZR as original)

1: incremental localization command, increases basing on the terminal position of the last sector.

2: relative localization command, increases on the current position.

3: meaningless

NEXT: After this path is finished and the delay time is reached, it will load the next path automatically, which is triggered by the next CTRG signal.

INS: it allows to be interrupted by the next path when this path is executed.

The following chart shows how to set NPRC to choose the next path.

NPRC			Next path
Bit7	Bit 6	Bit 5	
0	0	0	Path 1 (P400、P401；P500、P501)
0	0	1	Path 2 (P402、P403；P502、P503)
0	1	0	Path 3 (P404、P405；P504、P505)
0	1	1	Path 4 (P406、P407；P506、P507)
1	0	0	Path 5 (P408、P409；P508、P509)
1	0	1	Path 6 (P410、P411；P510、P511)
1	1	0	Path 7 (P412、P413；P512、P513)
1	1	1	Path 8 (P414、P415；P514、P515)

4. Path data

Path data is valid when path TYPE is 1.

For example, path 1 data is path target position, which consists of parameter P500 and P501.

Path 1 data = P501×2^{16}+ P500

The data unit is PEU, which is equal to the resolution of encoder.

The target position is confirmed relating to the position after DSZR. Take the position after DSZR as origin.

4.5.5 Motion path explanation

1. Internal sequence

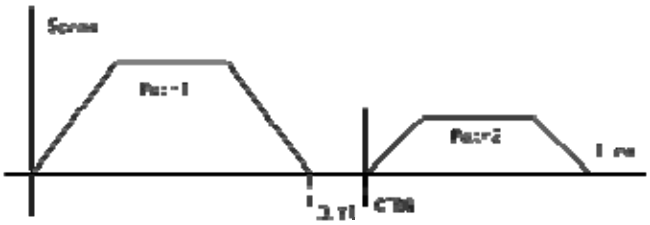

Path1: position command (TYPE=1).Execute the next one automatically (NEXT=1).DLY has been set.

Path 2: position command (TYPE=1)

Note: DLY begins to count when the command has been finished.Need CTRG to trigger.

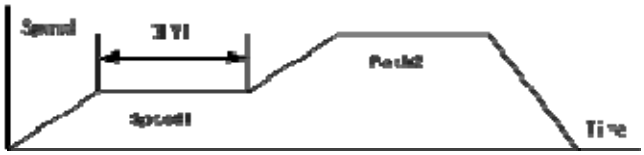

Path 1: speed command (TYPE=0), when DLY is set.

Path 2: position command (TYPE=1) (DLY begins to count when the command has been finished)

2. Interrupted

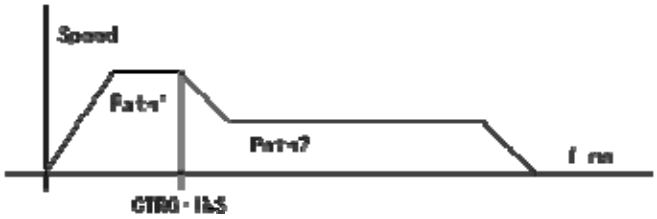

Path 1: Speed or position command, when it is set interrupt available (INS=1), regardless of whether DLY is set.

Path 2: speed or position command

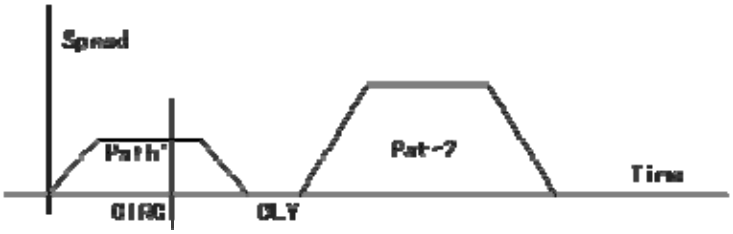

Path 1: position command. It is not allowed to be interrupted (INS=0).

Path 2: speed or position command

4.6 Gain adjustment

The servo driver includes the current control loop, the speed control loop and the position control loop. The control diagram is as follows:

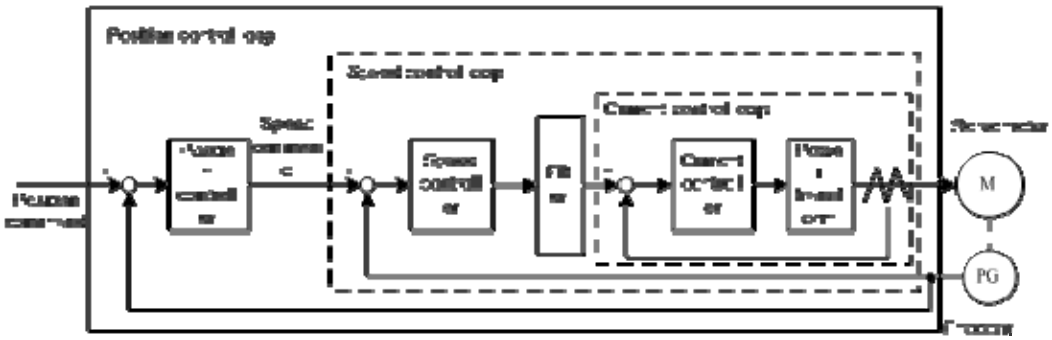

Theoretically, the inner control loop bandwidth must be higher than the outer loop; otherwise, the entire control system will be unstable and creates the vibration or worse response. Therefore, the relations of the bandwidth of the three control loops are as follows:

Bandwidth of the current loop>bandwidth of the speed loop>bandwidth of the of the position loop

Because the current control loop of the servo driver is already adjusted in an optimum condition, the only parameters of speed and position control loops have to be adjusted by the user.

4.6.1 Gain parameters

The parameters related to the gain are:

Parameter	Name	Range	Default value	Unit	Usage
P005	First gain of speed loop	1～3000	40	Hz	P,S
P006	First integral time constant of speed loop	1.0～1000.0	20.0	ms	P,S
P009	First gain of position loop	1～1000	40	1/s	P
P010	Second gain of speed loop	1～3000	40	Hz	P,S
P011	2nd integral time constant of speed loop	1.0～1000.0	20.0	ms	P,S
P013	Second gain of position loop	1～1000	40	1/s	P
P017	Ratio of load inertia	0.0～200.0	1.0	times	P,S

The definition of symbol as follows:

K_v：The gain of speed loop;

T_i：The integral time-constant of speed loop;
K_p：The gain of position loop;
G： The inertia ratio of load (P017);
J_L：The load inertia referred to the rotor shaft;
J_M：The rotor inertia of the servomotor.

1. The gain of speed loop K_v

The speed loop gain Kv directly determines the response bandwidth of the speed loop. Under the premise that there is no vibration in the mechanical system or noise, increases the speed loop gain, then the speed response can speed up, and is better to follow the speed command. However, it is easy to cause a mechanical resonance if the Kv is too large. The bandwidth of speed loop expresses as:

$$\text{Speed loop bandwidth}\,(Hz) = \frac{1+G}{1+J_L/J_M} \times K_v(Hz)$$

If the setting inertia ratio of the load G is correct (G=JL/JM), then the bandwidth of the speed loop is equal to the speed loop gain Kv.

2. The integral time-constant of speed loop T_i

The integral item of speed loop has an effect to eliminate static error of speed, and has rapid reaction to a slight speed change. Under the premise that there is no vibration in the mechanical system or noise, reduces the integral time constant Ti of speed loop, then the stiffness of the system increases, and reduces the static error. If load inertia ratio is very big or a resonating factor exists in the mechanical system, and then must confirm that the integral time constant is big enough, otherwise the mechanical system will be easy to cause resonating. If the setting inertia ratio of the load G is correct (G=JL/JM), uses following formula to obtain the integral time constant Ti of the speed loop.

$$T_i(ms) \geq \frac{4000}{2\pi \times K_V(Hz)}$$

3. The gain of position loop K_p

The gain of the position loop directly determines the reaction rate of the position loop. Under the premise that there is no vibration in the mechanical system or noise, increases the position loop gain, then speeds up the reaction rate, reduces the position tracking error and the positioning time is shorter. However, it is easy to cause a mechanical vibration or over travel if the Kp is too large. The bandwidth of the position loop should be lower than the bandwidth of speed loop. In general:

$$\text{Position loop bandwidth}\,(Hz) \leq \frac{\text{Speed loop bandwidth(Hz)}}{4}$$

If the setting inertia ratio of the load G is correct (G=JL/JM), uses the following formula to obtain the gain Kp of the position loop:

$$K_p(1/s) \le 2\pi \times \frac{K_v(Hz)}{4}$$

4.6.2 Procedure for gain adjustment

The bandwidth selections of the position and the speed loop depend on the machinery rigidity and the application situation. A leather belt conveyer has low rigidity and may set low bandwidth. Machinery with reducer and ball bearing screw has medium rigidity and may set medium bandwidth. Machinery with ball bearing screw or linear motor has higher rigidity and may set high bandwidth. If mechanical characteristics are unknown, may gradually increase the bandwidth until resonating, and then decreases the gain.

In the servo system, if changes a parameter, then other parameters also need to readjust. Therefore, do not change a parameter far from its original value. About the steps for changing the servo parameter, please observe the following principle generally:

Increase response	Decrease response, restrain vibration and overshoot
1.Increase gain of speed loop K_v 2. Decrease integral time constant of speed loop T_i 3. Increase gain of position loop K_p	1. Decrease gain of position loop K_p 2. Increase integral time constant of speed loop T_i 3. Decrease gain of speed loop K_v

Gain adjustment procedure for speed control loop

1. Set the load inertia ratio.
2. Set integral time constant of the speed loop with a relatively great value.
3. Under no vibration and unusual sound increase the gain of the speed loop, if vibration occurs then decrease the gain a bit.
4. Under no vibration and unusual sound, decrease the integral time constant of speed loop, if vibration occurs then increase the time constant a bit.
5. Because the mechanical system may have resonating factors and is unable to adjust for a bigger gain, then the desired response cannot obtain. Now, use low pass or notch filter for torque to suppress the resonance, and then carry on above steps again enhancing responsiveness. First use the low pass filter of torque, if the effect is not good then use notch filter again. Please refer to 4.7 sections about resonance suppression.

Gain adjustment procedure for position control loop

1. Set the load inertia ratio.
2. Set integral time constant of the speed loop with a relatively great value.
3. Under no vibration and unusual sound increase the gain of the speed loop, if vibration occurs then decrease the gain a bit.
4. Under no vibration and unusual sound, decrease the integral time constant of speed loop, if

vibration occurs then increase the time constant a bit.

5. Increase the gain of position loop, if vibration occurs then decreases the gain a bit.
6. Because the mechanical system may have resonating factors and is unable to adjust for a bigger gain, then the desired response cannot obtain. Now, use low pass or notch filter for torque to suppress the resonance, and then carry on above steps again enhancing responsiveness. First use the low pass filter of torque, if the effect is not good then use notch filter again. Please refer to 4.7 sections about resonance suppression.
7. If need shorter positioning time and smaller position tracking error, can adjust the feed forward of the position loop. Please refer to 4.2.4 section

4.7 Resonance suppressions

When the mechanical system has the resonance effect, it is possibly created by higher rigidity of the servo system and quicker response. It may improve if reduce the gain. The servo driver provides the low pass filter and the notch filter. Under unchanging the gain by using filters can achieve the effect of resonance suppression.

The parameters related to Resonating suppression as follows:

Para meter	Name	Range	Default value	Unit	Usage
P007	Time constant of filter for first torque	0.10～50.00	2.50	ms	ALL
P012	Time constant of filter for second torque	0.10～50.00	2.50	ms	ALL
P200	Frequency of first notch filter	50～1500	1500	Hz	ALL
P201	Quality factor of first notch filter	1～100	7		ALL
P202	Depth of first notch filter	0～100	0		ALL
P203	Frequency of second notch filter	50～1500	1500	Hz	ALL
P204	Quality factor of second notch filter	1～100	7		ALL
P205	Depth of second notch filter	0～100	0		ALL

The principle for suppression resonance is to use filters to suppress the resonance peak that the machinery responds. The schematic drawing is as follows:

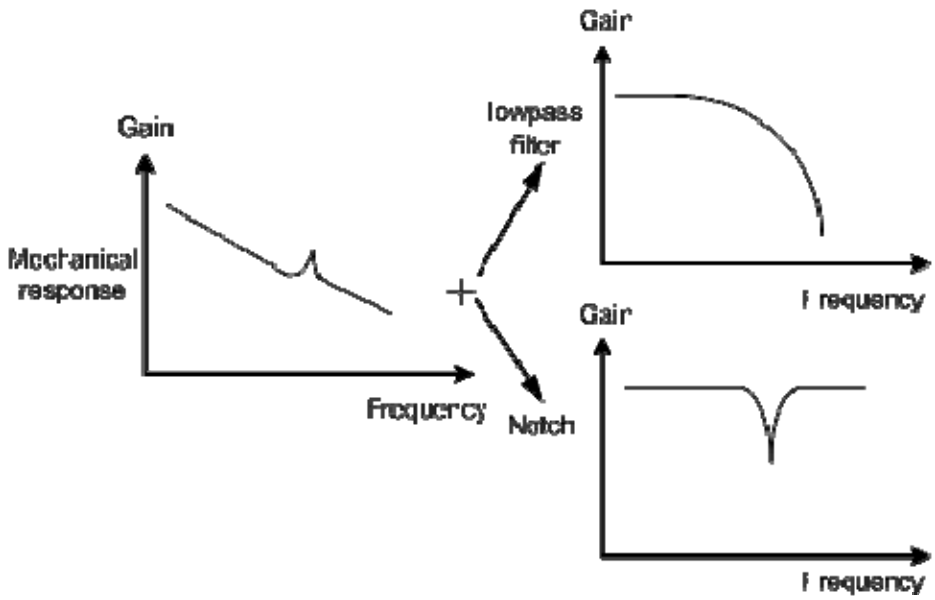

Two kinds of filter characteristics are:

Filter type	Suitable case	Advantage	Disadvantage
Low pass filter	High frequency resonance	Do not need to know the exact resonance frequency	Bring phase delay; reduce bandwidth of the system. Do not suitable for the case of medium and low frequency resonance.
Notch filters	medium and low frequency resonance	Do not affect the bandwidth of the system.	It is important to know the exact resonance frequency. If make mistake of frequency setting, will affect the performance. It is not suitable that if the resonance frequency drifts all the time.

4.7.1 Low pass filters

The low pass filter is active by default. There are two parameters P007 and P012 for setting the time constant of torque filter. However, they are not used together at the same time. The low pass filter has the very good weaken effect on high frequency and can suppress high frequency resonance and noise. For example, the machinery with ball bearing screw sometimes can have high frequency resonance if increasing the gain. Using low pass filter can get better effect, but the system response bandwidth and the phase allowance also reduced, the system may become

unstable. If the system is low frequency resonating, the low pass filter is unable to suppress it.

When the high frequency vibration caused by the servo driver, adjust the filter time-constant Tf of torque, possibly can eliminate the vibration. The smaller the value, the better control response achieves, but it is limited by mechanical condition. ; The bigger the value, the better suppressing effect achieves on high frequency vibration, but the phase allowance reduces and can cause the oscillation if the value is too big. If the load inertia ratio is set correctly G (G=JL/JM), must satisfy the following condition:

$$T_f(ms) \le \frac{1000}{2\pi \times 2 \times K_v(Hz)}$$

4.7.2 Notch filters

The notch filters are not active by default. By setting the parameter P200~P205, two notch filters can be used at the same time and can suppress two kind of different frequency resonance. If the resonance frequency is known, then by using the notch filter the resonance can be eliminated directly. It has better effect than by using the low pass filter. When resonance frequency is unknown, may gradually reduce the notch frequency from high to low, the notch frequency will be the optimum setting value while the vibration is smallest. If resonance frequency changes with time or other factor and the frequency displacement is too large, therefore it is not suitable to use the notch filter.

Except frequency, but also may adjust the notch depth and the quality factor and must pay attention to the setting values to be appropriate. If the notch depth is deep, the suppression effect on the mechanical resonance is possibly good, but can create the phase changing in a big way, sometimes can strengthen the vibration instead. The smaller the quality factor, the wider notch width achieves, and the mechanical resonance suppression effect is quite good, but can create the phase changing in big region, sometimes can strengthen the vibration instead.

4.8 Gains switching

Through internal condition or external signals carry on gains switching to achieve the following goals:

- When the servomotor is in stop condition (servo driver is locking),make a switching for low gain in order to suppress the vibration and the incisive noise;
- When the servomotor is in stop condition, make a switching for high gain in order to enlarge the rigidity of the servo system;
- When the servomotor is in running condition, make a switching for high gain in order to obtain the better tracking performance and the small positioning time;
- According to the load situation, switching different gain achieves the optimizing control.

Showing below there are the first group and the second group of gain. Each group has four parameters. The first group will switch to the second group or vice versa.

First gain group		Second gain group	
Parameter	Name	Parameter	Name
P005	First gain of speed loop	P010	Second gain of speed loop
P006	First integral time constant of speed loop	P011	2nd integral time constant of speed loop
P007	Time constant of filter for first torque	P012	Time constant of filter for second torque
P009	First gain of position loop	P013	Second gain of position loop

4.8.1 Parameters for gain switching

The parameters related to the gain switching are:

Parameter	Name	range	Default value	Unit	Usage
P208	Gain switching selection	0～5	0		ALL
P209	Level of gain switching	0～32767	100		ALL
P210	Level hysteresis of gain switching	0～32767	5		ALL
P211	Delay time of gain switching	0～3000	5	ms	ALL
P212	Time of gain switching	0～3000	5	ms	ALL

4.8.2 Action of gain switching

Action conditions for gain switching are:

P208	P209	Condition of gain switching
0	Unacted	Fixed first gain group
1	Unacted	Fixed second gain group.
2	Unacted	Input GAIN terminal for gain switching from DI. 'OFF' is the first gain group; 'ON' is the second gain group.
3	Frequency(×0.1kpps)	If the input frequency of command pulse surpasses P209, then switches to second gain group.
4	Position(pulse)	If position pulse deviation surpasses P209, then switches to second gain group.
5	Speed(r/min)	If the servomotor speed of surpasses P209, then switches to second gain group.

The following chart shows: make a switching to the second gain group when the switching condition is satisfied. After that, if the switching condition is not satisfied, make a switching to the first gain group. The switching condition must maintain a period set by parameter P211 and then can make switching to avoid mistake by receiving disturbance. During switching, the current gain group will make linearity change to the goal gain group according to the setting time by parameter P212. Each parameter of the gain group will all make change at the same time to avoid the machinery impact caused by the parameter changing suddenly. In order to prevent the switching happens frequently, the comparator has a hysteretic error set by Parameter P210.

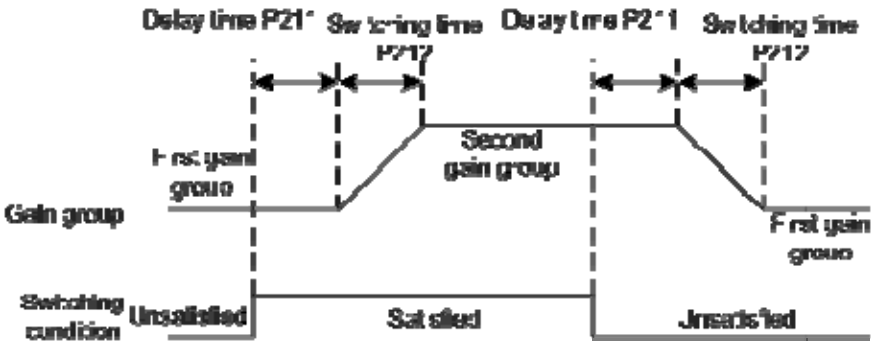

In the speed control, PI and P control modes can make switching between them. Set the second integral time constant (P011) with maximum value (1000.0) in the second gain group. It is equal in canceling the integral item. Other parameters in the second gain group are the same as the

first group. Therefore, it is a P control mode resulting in PI/P control switching.

4.9 Homing

The homing let the mechanical to move to an assigned point. Take it as the reference origin for later on movement.

4.9.1 Parameters for homing

The parameters related to homing are:

Para meter	Name	Range	Default value	Unit	Usage
P178	Trigger mode of homing	0～3	0		ALL
P179	Reference mode of homing	0～5	0		ALL
P180	Origin mode of homing	0～2	0		ALL
P181	misalignment top digit of homing	-32768～32767	0	10000pulse	ALL
P182	misalignment bottom digit of homing	-9999～9999	0	pulse	ALL
P183	First speed of homing	1～3000	500	r/min	ALL
P184	Second speed of homing	1～3000	50	r/min	ALL
P185	Acceleration time of homing	0～30000	0	ms	ALL
P186	Deceleration time of homing	0～30000	0	ms	ALL
P187	Positioning time delay of homing	0～3000	50	ms	ALL
P188	Delay time of complete signal after homing	1～3000	100	ms	ALL
P189	Command executive mode after homing	0～1	0		ALL

4.9.2 Operation procedure for homing

The homing operation is divided two steps:

1. Seek for the reference point (rough origin)

   After starts the homing function, seek the reference point according to the first speed of homing. Can use REF input terminal (external detector input), CCWL or CWL as the reference point, also may use the Z pulse as the reference point. For seeking the reference point, can choose clockwise or counterclockwise direction operation.

2. Seek for the origin

After found the reference point, and then seek for the origin according to the second speed of homing. Can choose forward or backward direction seeking for the Z pulse, also can directly make the reference point as the origin.

During homing operation, in order to avoid the machinery impact caused by speed change quickly uses the acceleration and the deceleration functions set by parameter P185, P186. The origin position adds on the offset quantity to make the actual origin. The offset quantity is P181×10000 + P182.

4.9.3 Methods of homing

The parameters related to homing method are:

Parameter	Name	setting	Explanation
P178	Trigger mode of homing	0	Closed the function of homing.
		1	Voltage level triggering of terminal GOH from DI input.
		2	Rising edge triggering of terminal GOH from DI input.
		3	Automatic execution after turn on power supply.
P179	Reference mode of homing	0	After starts homing, seek REF (external detector input; rising edge trigger) in CCW direction with first speed (P183) and take it the reference point.
		1	After starts homing, seek REF (external detector input; rising edge trigger) in CW direction with first speed (P183) and take it the reference point.
		2	After starts homing, seek CCWL (falling edge trigger) in CCW direction with first speed (P183) and take it the reference point. Neglect CCWL prohibition function when homing execution, but resume the prohibition function after the homing finished.
		3	After starts homing, seek CWL (falling edge trigger) in CW direction with first speed (P183) and take it the reference point. Neglect CWL prohibition function when homing execution, but resume the prohibition function after the homing finished.
		4	After starts homing, seek Z pulse in CCW direction with first speed (P183) and take it the reference point.
		5	After starts homing, seek Z pulse in CW direction with first speed (P183) and take it the reference point.
P180	Origin mode of homing	0	After found the reference point, seek Z pulse in backward direction with second speed (P184) and take it the origin.
		1	After found the reference point, seek Z pulse in forward direction

			with second speed (P184) and take it the origin.
		2	After found the reference point, directly make it the origin.

For homing, the reference point mode (P179) and the origin mode (P180) cab be combined and have the following combinations. The detailed actions of each combined mode refer to 4.9.5 section.

P179 / P180	0	1	2	3	4	5
0	●(A)	●(B)	●(A)	●(B)	×	×
1	●(C)	●(D)	×	×	×	×
2	●(E)	●(F)	×	×	●(G)	●(H)

In which: ●indicate recommendation use; ×indicate does not recommend the use.

4.9.4 Timing chart of homing

1. Level triggering (P178=1)

After the SON is on (active), the homing execution is triggered by input signal of terminal GOH. Then the normal command execution suspends. The GOH maintains ON continuously. After the homing completed, the position and the position deviation reset, the output signal of terminal HOME becomes ON. Then HOME signal is ON until GOH signal becomes OFF.

When P189=0, after the homing completed, waited for the OFF signal of the HOME, and then carry out the normal command execution again. During the waiting period, the servomotor pauses at the origin and does not accept any command; When P189=1, after the homing completed, carries out the normal command execution immediately.

During homing operation, if SON becomes OFF, or any warning occurs, or GOH becomes OFF, then the homing operation stops and the output terminal HOME does not act.

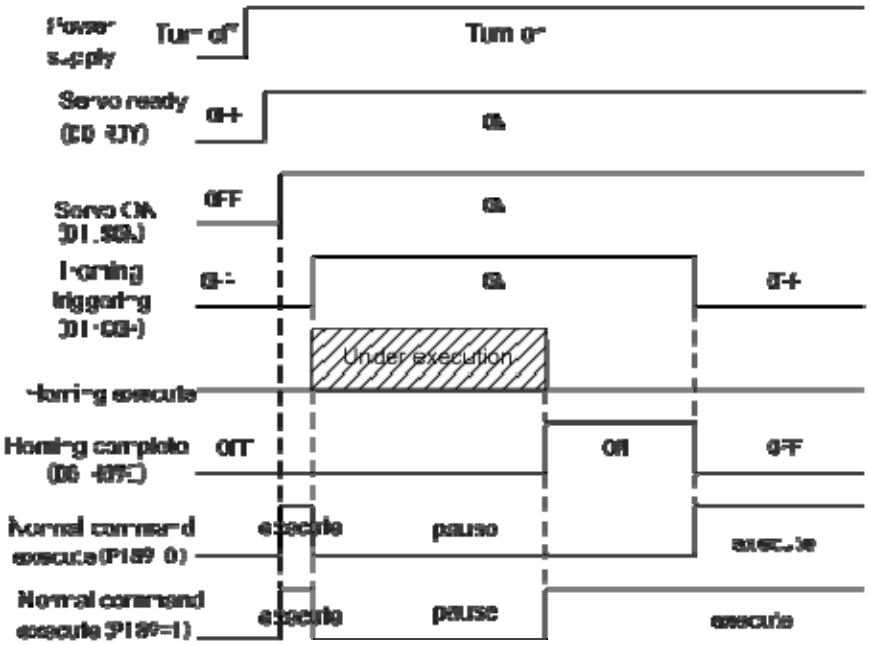

2. Rising edge triggering (P178=2)

After the SON is on (active), the homing execution is triggered by the rising edge of input signal on terminal GOH. Then the normal command execution suspends. After the homing completed, the position and the position deviation reset, the output signal of terminal HOME becomes ON. After the delay time completed, then HOME signal becomes OFF.

When P189=0, after the homing completed, waited for the OFF signal of the HOME, and then carry out the normal command execution again. During the waiting period, the servomotor pauses at the origin and does not accept any command; When P189=1, after the homing completed, carries out the normal command execution immediately.

During homing operation, if SON becomes OFF, or any warning occurs, then the homing operation stops and the output terminal HOME does not act.

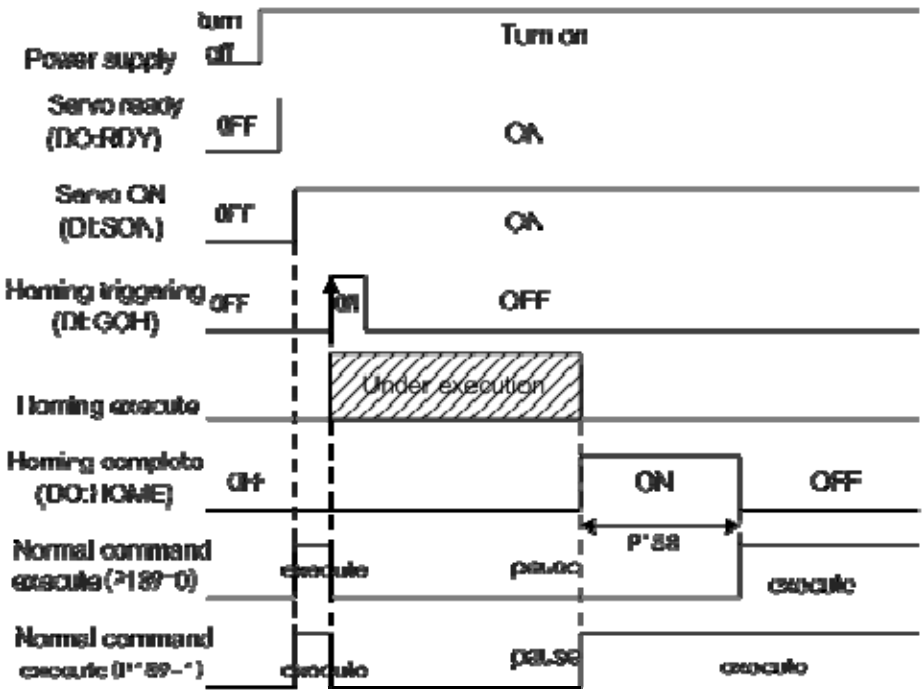

3. Auto-execution when turn on the power supply (P178=3)

This function only uses in the condition that the power supply turn on and the SON is ON for the first time. Each time carries out homing operation once and will not need to execute homing operation later. Using this function can abbreviate a GOH input terminal.

After the homing completed, the position and the position deviation reset, the output signal of terminal HOME becomes ON. After the delay time set by P188 has completed, then HOME signal becomes OFF. Then can carry out the normal command execution again.

When P189=0, after the homing completed, waited for the OFF signal of the HOME, and then carry out the normal command execution again. During the waiting period, the servomotor pauses at the origin and does not accept any command; When P189=1, after the homing completed, carries out the normal command execution immediately.

During homing operation, if SON becomes OFF, or any warning occurs, then the homing operation stops and the output terminal HOME does not act.

If the servo-on is not for the first time, cannot trigger the homing operation once more.

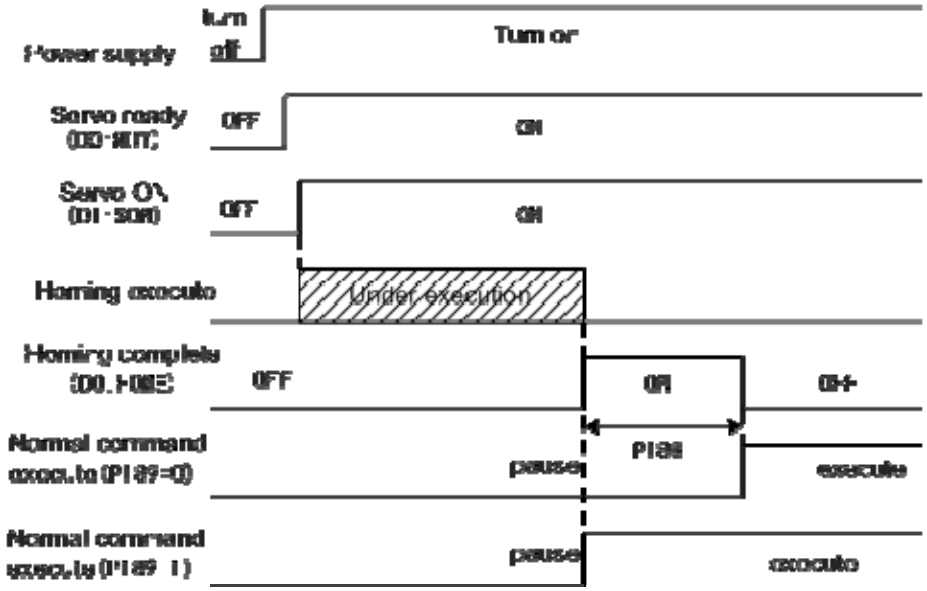

4.9.5 Timing chart of homing for combination mode

For homing, the reference point mode (P179) and the origin mode (P180) cab be combined and have the following combinations. The detailed actions of each combined mode refer to 4.9.3 section.

(A) P179=0 or 2/P180=0

Parameter	Setting	explanation
P179	0 or 2	After starts homing, seek REF (rising edge trigger) or CCWL (falling edge trigger) in CCW direction with first speed (P183) and take it the reference point.
P180	0	After found the reference point, seek Z pulse in backward direction with second speed (P184) and take it the origin.

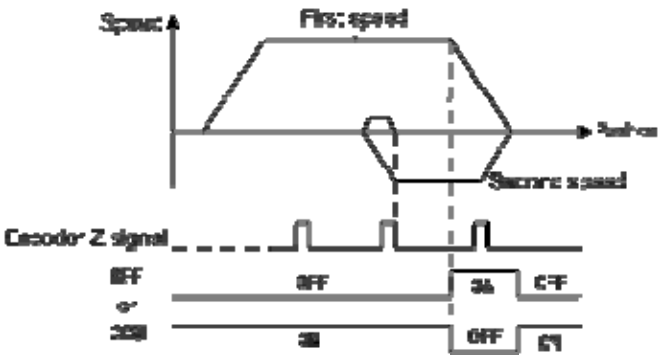

(B) P179=1 or 3/P180=0

Parameter	Setting	Explanation
P179	1 or 3	After starts homing, seek REF (rising edge trigger) or CWL (falling edge trigger) in CW direction with first speed (P183) and take it the reference point.
P180	0	After found the reference point, seek Z pulse in backward direction with second speed (P184) and take it the origin.

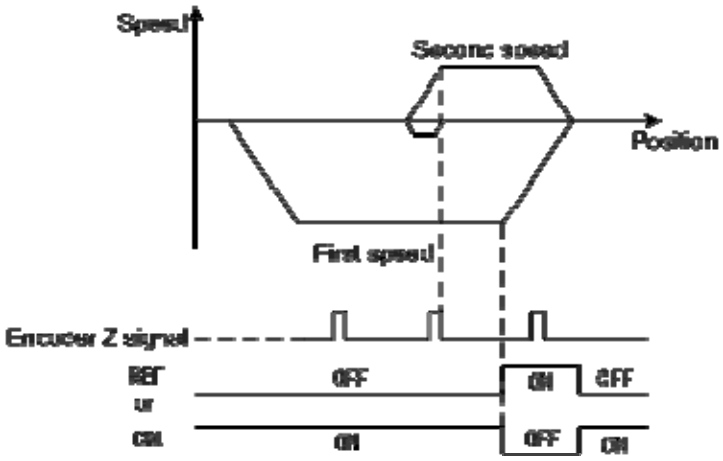

(C) P179=0/P180=1

Parameter	Setting	Explanation
P179	0	After starts homing, seek REF (rising edge trigger) in CCW direction with first speed (P183) and take it the reference point.
P180	1	After found the reference point, seek Z pulse in forward direction with second speed (P184) and take it the origin.

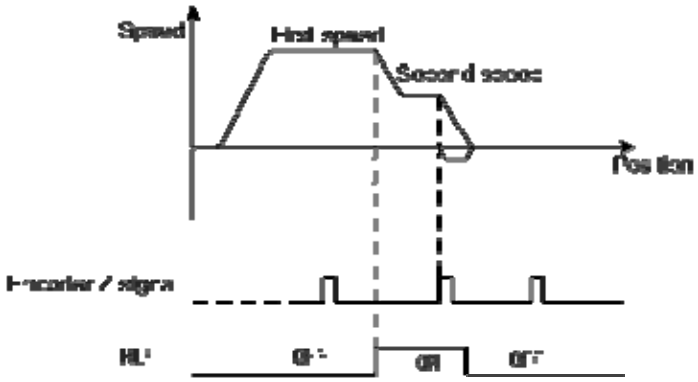

(D) P179=1/P180=1

Parameter	Setting	Explanation
P179	1	After starts homing, seek REF (rising edge trigger) in CW direction with first speed (P183) and take it the reference point.
P180	1	After found the reference point, seek Z pulse in forward direction with second speed (P184) and take it the origin.

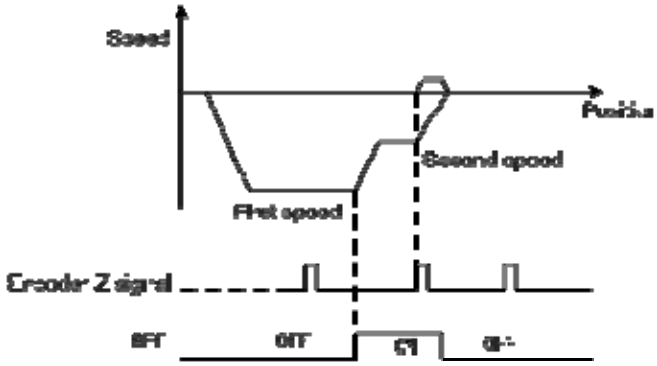

(E) P179=0/P180=2

Parameter	Setting	Explanation
P179	0	After starts homing, seek REF (rising edge trigger) in CCW direction with first speed (P183) and take it the reference point.
P180	2	After found the reference point, directly make it the origin.

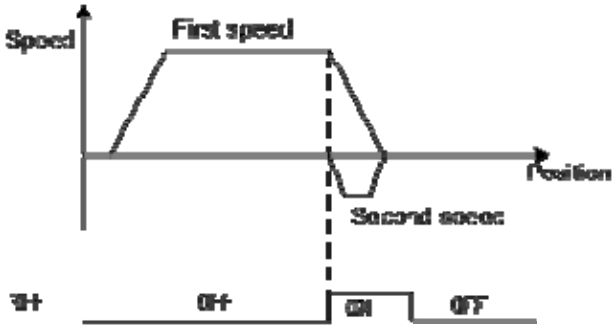

(F) P179=1/P180=2

Parameter	Setting	Explanation
P179	1	After starts homing, seek REF (rising edge trigger) in CW direction with first speed (P183) and take it the reference point.
P180	2	After found the reference point, directly make it the origin.

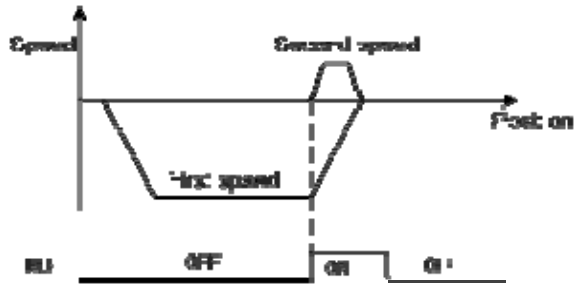

(G) P179=4/P180=2

Parameter	Setting	Explanation
P179	4	After starts homing, seek Z pulse in CCW direction with first speed (P183) and take it the reference point.
P180	2	After found the reference point, directly make it the origin.

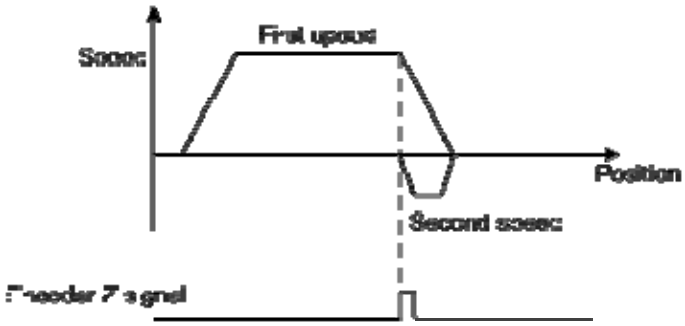

(H) P179=5/P180=2

Parameter	Setting	Explanation
P179	5	After starts homing, seek Z pulse in CW direction with first speed (P183) and take it the reference point.
P180	2	After found the reference point, directly make it the origin.

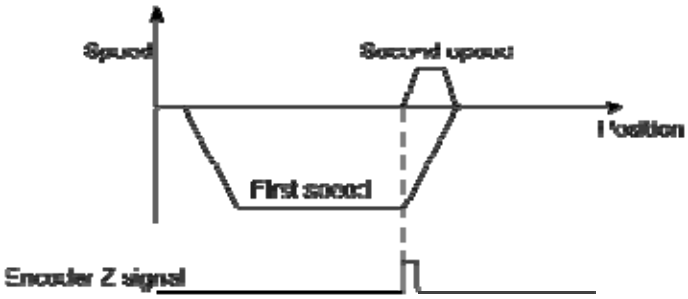

4.10 Set the absolute encoder

This chapter is applicable to the servo drive with absolute encoder, while it is not valid to the incremental drive and resolver drive.

Servo motor	resolution	Multiturn data output range	Transfinite operation
Absolute encoder	17 bits	-32768～+32767	When it is higher than the upper limit value of CCW direction (+32767): multi-turn data=-32768 When it is lower than the upper limit value of CCW direction(-32768): multi-turn data=+32767

4.10.1 Set the standard connection diagram and SEN signal of absolute encoder

kinds	Signal name	Connector pin number	setting	meaning
input	SEN	IO/1 ～ 5 selectable	OFF	Optocoupler is in the state of not conducting
			ON	Optocoupler is in the conducting state

In the servo motor with absolute encoder, the standard connection example among servo units is as follows:

Besides, it needs to set the SEN signal when it outputs the absolute data from servo unit.

1. The standard connection diagram of absolute encoder

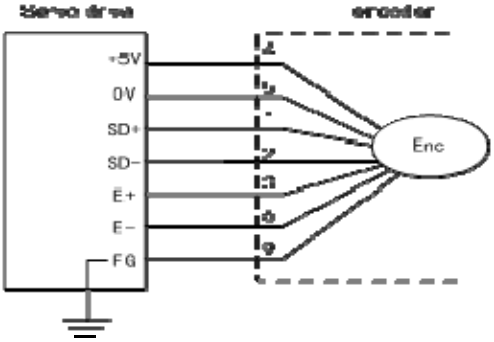

2. Set the SEN signal

The setting method of SEN signal is as follows.
Again set the SEN signal as ON. Please do as the following diagram. Only when the riseup edge of SEN appears over 1.3S, can it be executed again.

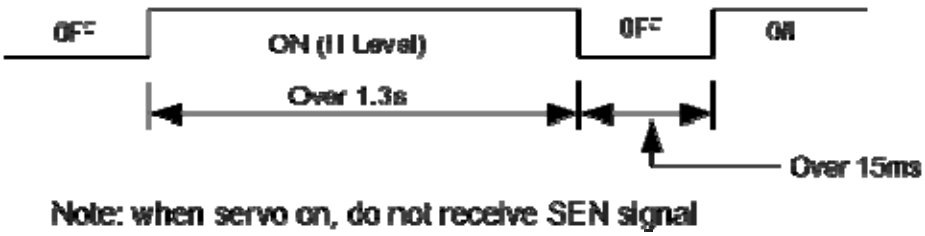

4.10.2 Backups for the multi-turn information of absolute encoder

Absolute encoder defaults to be single-ring value. If the user needs multi-turn position value, he needs to set the parameter P090 as 1, save it, and restart the drive.

In order to save the multi-turn position data of absolute encoder, battery unit needs to be installed.

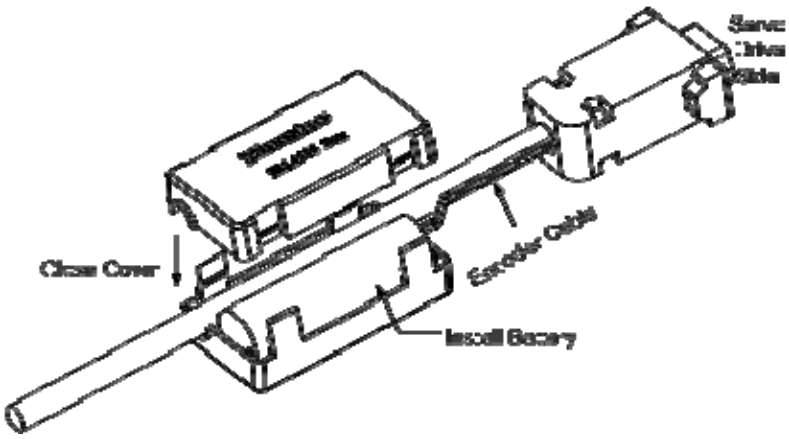

Note: do not set battery unit on both sides of servo drive. Please set the battery unit to any side of servo drive.

requirement of battery voltage: 3.2VDC～4.8VDC

If the battery voltage is out of range, the servo drive will alarm (Err48) when it powers on. If so, please replace the battery. In order to solve the display of “encoder battery alarm (Err48)” after replacement, please ensure servo drive is not in the enabled state. Connect the servo drive and control partial power supply, and initialize the absolute encoder. The multi-turn value is zero after initialization. Make sure the error display has disappeared. Then the servo drive can work well.

4.10.3 The initialization of absolute encoder

In the following situation, the absolute encoder must be initialized.

The first time to start machine

"Alarm for encoder battery (Err48)" happens

"Alarm for encoder internal fault (Err41)" happens

"Alarm for motor overheating (Err49)" happens

When it needs to set the rotating number of the absolute encoder as zero

Initiate through Fn36. Steps should refer to section 3.6.1.

4.10.4 Receiving and sending order of absolute encoder

Next it will explain the sequence from receiving the output of absolute encoder to the absolute data sent to the upper position by servo unit.

（1）Summary for absolute signal

As the following picture shows, the serial data of absolute encoder outputted by servo unit and pulse are outputted from 'OA, OB, OZ'

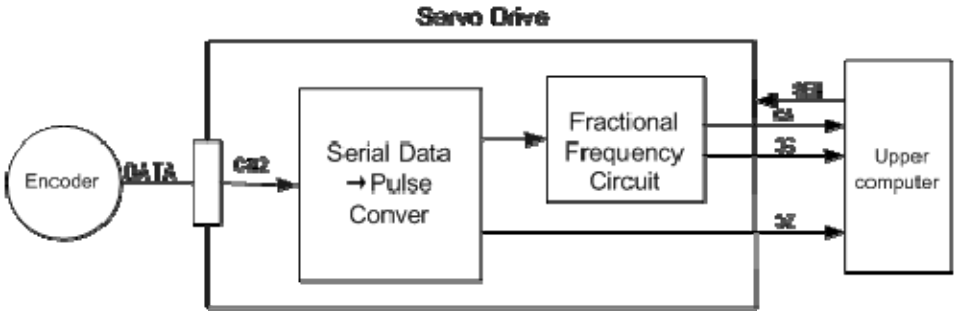

Signal name	condition	Signal contents
OA+ OA-	Initial period	Serial data Initial incremental pulse
	Usually period	incremental pulse
OB+ OB-	initialization	Initial incremental pulse
	Usually period	incremental pulse
CZ	Usually period	Origin pulse
OZ+ OZ-		

2）The sending order and contents of absolute data

The sending order of absolute data

1. Set the SEN signal to be valid.

2. After 50ms, it enters serial data and sends waiting state.

3. After 60ms, it receives 8 bits serial data.

4. After 400ms of finishing receiving the last serial data, it enters into the usual incremental action state.

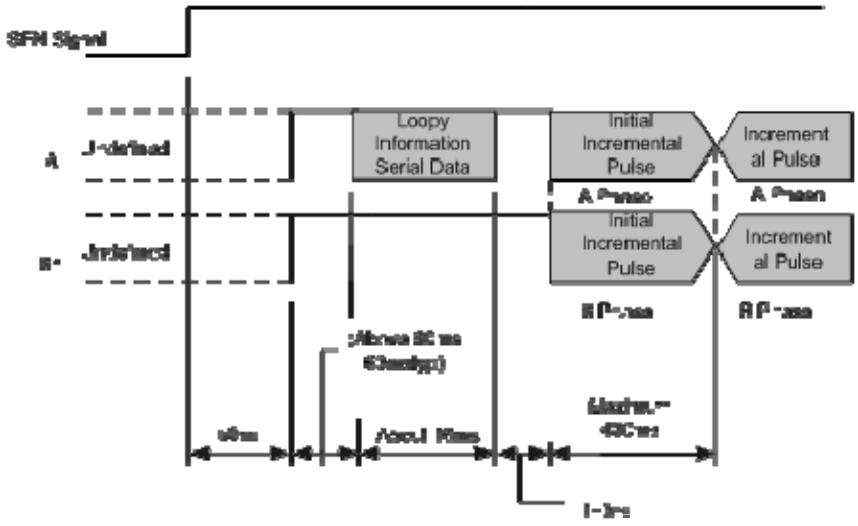

SEN Signal

At inversion mode (P173=1), the output polarity of signal B will take reverse.

Multi-turn information serial data:

means the position at which the motor axis has rotated several circles from reference position (the value is zero after encoder initialization)

Initial incremental pulse:

The pulse output by the pulse speed for rotating from the position of motor axis origin to the current motor axis position by about 1250min^{-1} (17 bits, the frequency pulse is the factory setting value)

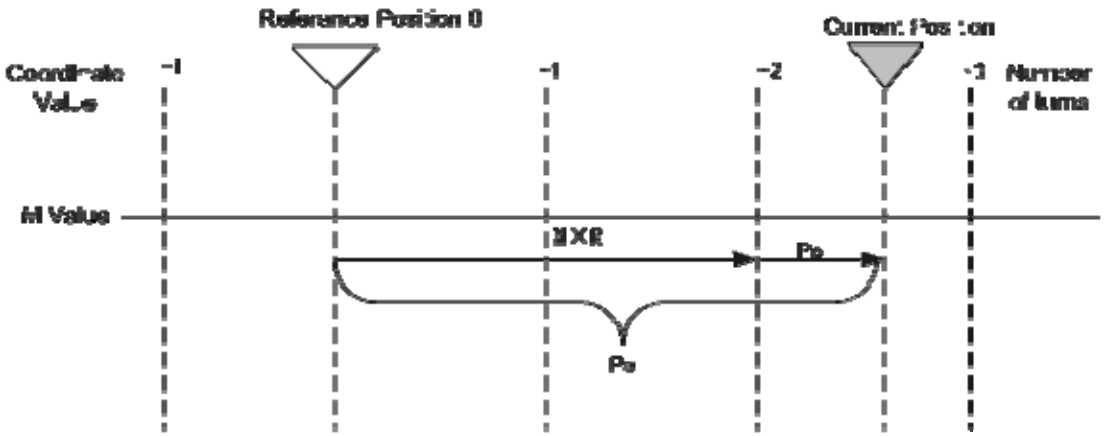

The final absolute data Pm comes out from the following equation.

Pe=M×R+Po

mark	meaning
Pe	current positional value
M	Multi-rotating rings data (Multi-rotating data)
Po	Initial incremental pulse number
R	The pulse number when encoder rotates one circle（P027×P028）

（3）the detailed specification of signal

The detailed specification of all signals is as below.

OA serial data specification

The rotating quantity when output 5 bits

The data transmission method	start-stop synchronism（ASYNC）
Baud rate	9600bps
Start bit	1bit
End bit	1bit
Odd and even check	Even check
character code	ASCII 7 bits

Data form	8 bits. The contents are showing as following picture. 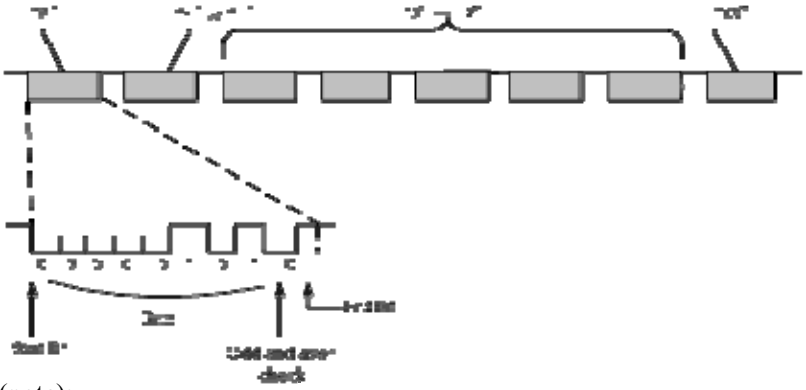 (note): 1.the range of null circle is one of "P+00000"(CR) or "P-00000"(CR) 2.the range of rotating volume is "+32767～—32768" . If it exceeds this range, the data "+32767" will turn to "-32768" and the data of "-32768" will turn to "+32767".

4.11 Over-travel protections

The security function of over travel protection is refers that when the movement part of the machinery just exceed the design safe range of motion, the limit switch acts and forces the servomotor to stop. A schematic diagram showing the over travel protection as follows:

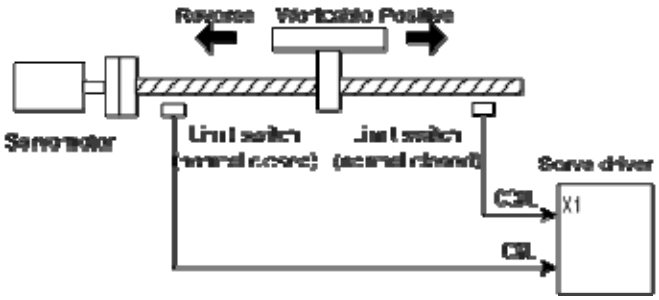

The limit switch suggested using normal closed type. It is close in the safety range and it is open in over travel range. The limit switch on the right connects to CCW forbid terminal (CCWL) and the limit switch on the left connects to CW forbid terminal (CWL).

This security function of over travel protection can be set for use or neglect by setting the parameter P097. The limit signal must be connected for the use, or do not need this signal in case of neglect.

The default value of P097 (for CCWL and CWL) is all neglects. Must modify parameter P097 if needs to use. Under the over travel condition, use the reverse command to withdraw back from the over travel condition.

P097	Motion inhibition in CW direction(CWL)	Motion inhibition in CCW direction(CCWL)
0	Use	Use
1	Use	Neglect
2	Neglect	Use
3(Default)	Neglect	Neglect

4.12 Torque limitations

In order to protect the machinery from over-load can carry on the limit to the output torque.

4.12.1 Parameters for torque limitations

The parameters related to torque limit:

Para meter	Name	Range	Default value	Unit	Usage
P064	Torque limit selection	0～2	0		ALL
P065	Internal torque limit in CCW direction	0～300	300	%	ALL
P066	Internal torque limit in CW direction	-300～0	-300	%	ALL
P067	External torque limit in CCW direction	0～300	100	%	ALL
P068	External torque limit in CW direction	-300～0	-100	%	ALL
P069	Torque limit in trial running	0～300	100	%	ALL

4.12.2 Modes of torque limitation

P064	Explanation	(CCW)	(CW)
0	Basic limit	Determines by TCCW from DI inputs： TCCW=OFF: arameterP065 TCCW=ON: parameterP067	Determines by TCW from DI inputs： TCW=OFF:parameterP066 TCW=ON:parameter P068
1	Basic limit + Analog limit	Except basic limit, it is also limited by analog torque command. Limitation does not relate to the rotation direction.	
2	Basic limit + Internal torque limit	Except basic limit, it is also limited by internal torque command. Limitation does not relate to the rotation direction. The internal torque command is determined	

		by TRQ1 and TRQ2 from DI inputs.

Note: 1.The final limitation value will be the smallest value if many limits occur.

2. The limit of the P065 and the P066 is effective all the time.

3. Even if the setting value greater than the permission maximum speed of the system, but the operation also can limit in the maximum torque range.

The inner torque commands are:

DI Signals[Note]		Torque command
TRQ2	TRQ1	
0	0	Internal torque 1 (parameter P145)
0	1	Internal torque 2 (parameter P1456)
1	0	Internal torque 3 (parameter P147)
1	1	Internal torque 4 (parameter P148)

Note: 0 indicates OFF, 1indicates ON.

4.13 Timing chart of operation

4.13.1 Timing chart when power supply switch on

- The control power supply L1C, L2C turns on before or at the same time when the main power supply L1, L2, and L3 turn on. If only the control power supply turn on, the servo ready signal (RDY) is OFF.
- After the main power supply turn on, at about 1.5 seconds later the servo ready signal is on (RDY), from now can accept the servo enable signal (SON). The servo driver examines that the SON is effective, and then the power circuit and the servomotor are active. The servomotor is in running status. If the SON is invalid or an alarm occurs, power circuit shut down and the servomotor is in free running state.

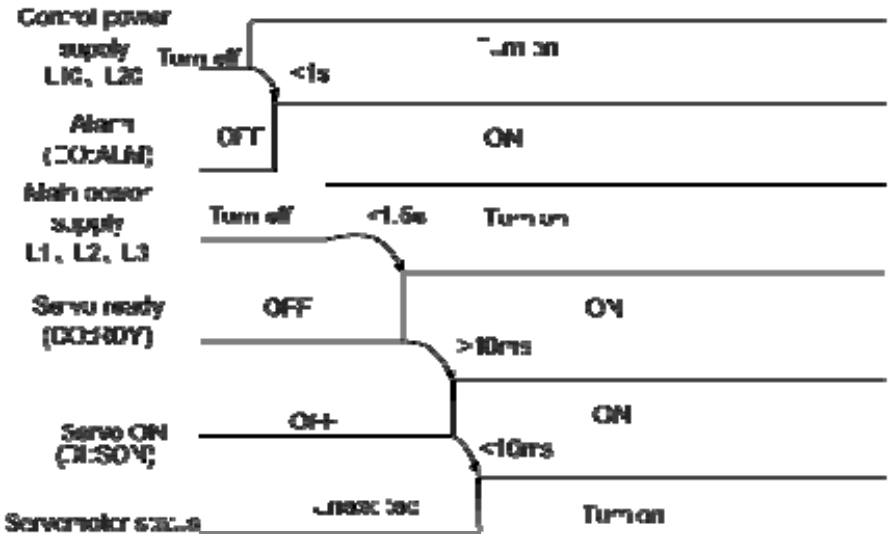

4.13.2 Alarm timing chart while servo-ON is executed

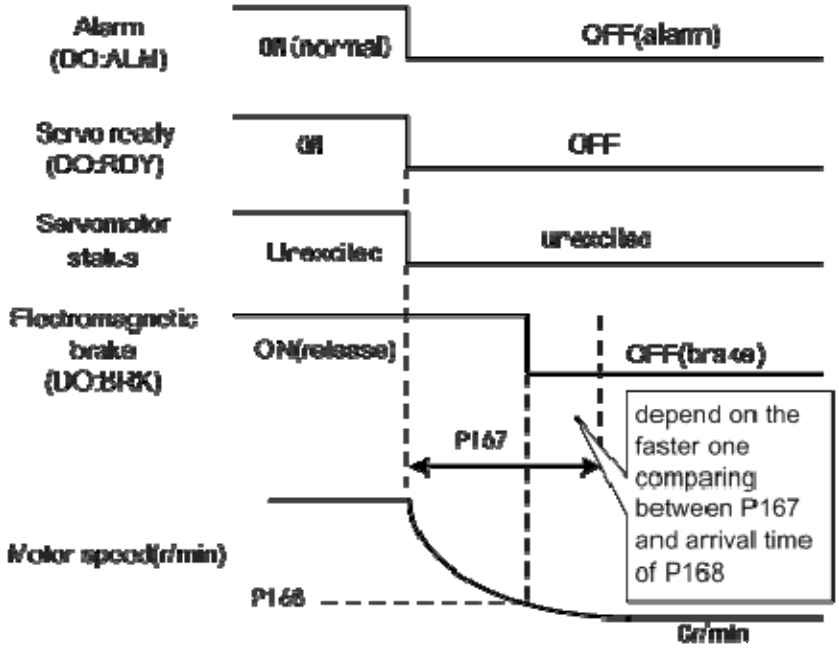

4.13.3 Action timing chart while servo-ON/OFF are executed during the servo motor is in standstill

When the speed of the servomotor is lower than parameter (P165), the action-timing chart is:

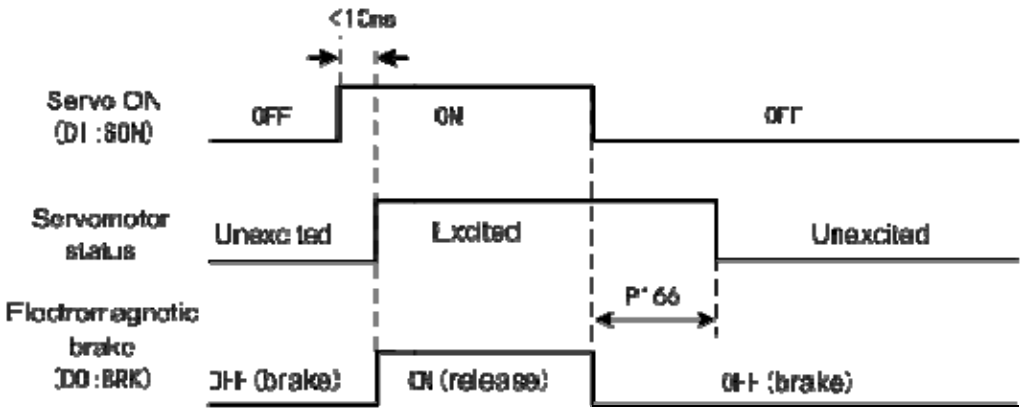

4.13.4 Action timing chart while servo-ON/OFF are executed during the servo motor is in motion

When the speed of the servomotor is higher than parameter (P165), the action-timing chart is:

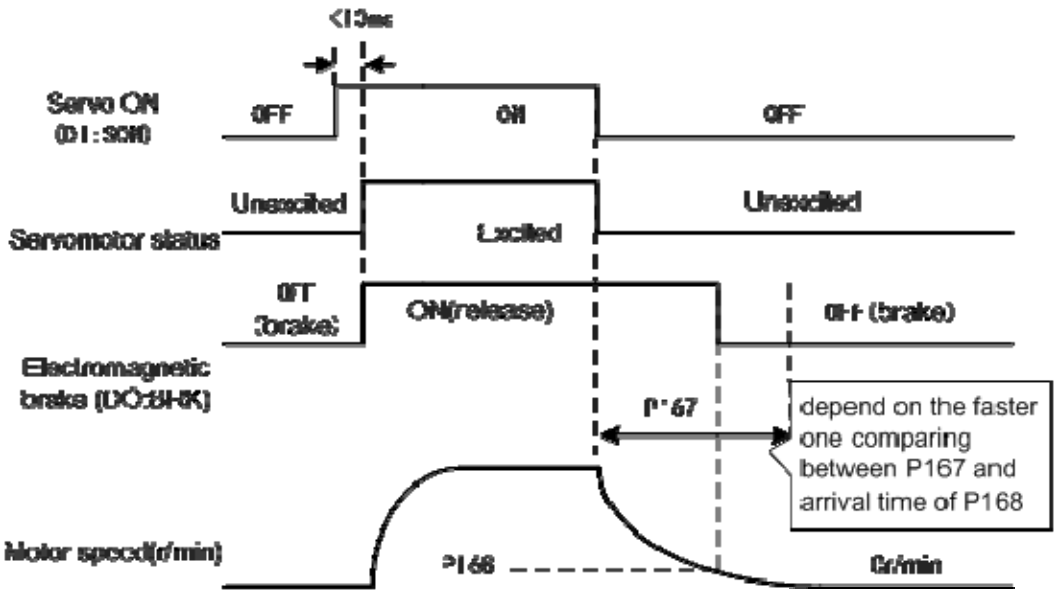

4.14 Electromagnetic holding brake

The electromagnetic brake (holding brake, lost power brake) is used in locking the vertical or the inclined worktable of machine tool, which connected with the servomotor. When the power supply lost or SON is OFF, prevent the worktable from fall and break. Realizes this function, must select and purchase the servomotor with electromagnetic brake. The brake only can use for holding the worktable and cannot use for decelerating and or stopping machine movement.

4.14.1 Parameters of electromagnetic holding brake

The parameters related to the electromagnetic brake:

Para meter	Name	Range	Default value	Unit	Usage
P165	Speed check point for servomotor is near standstill	0～1000	5	r/min	ALL
P166	Delay time for electromagnetic brake when servomotor is in standstill	0～2000	0	ms	ALL
P167	Waiting time for electromagnetic brake when servomotor is in motion	0～2000	500	ms	ALL
P168	Action speed for electromagnetic brake when servomotor is in motion	0～3000	100	r/min	ALL

4.14.2 Make use of electromagnetic holding brake

The chart below is the brake wiring diagram, the brake release signal BRK of the servo driver connect to the relay coil, the contact of relay connect brake coil and DC supply. The brake power supply has enough capacity provided by the user. Suggested installs the surge absorber to suppress surge voltage caused by switching off the relay. The diode also makes the surge absorber, but must pay attention to that the action of the brake has a little lagging.

Under the speed of the servomotor is smaller than parameter P165, if the SON becomes OFF. By now, the servomotor will continue to excitation for holding the position, after the period set by parameter P166 removes the excitation from the servomotor.

Under the servomotor is in motion (The speed is bigger than P165) if the SON becomes OFF, by now the excitation is removed from the servomotor, after delay period of time the brake becomes active. During the delay time, the servomotor decelerates from the high speed down to

the low speed, and then the brake is active to avoid damaging the brake. The delay time is set by the parameter P167 or is the time that the speed of the servomotor decelerates to the speed set by parameter P168. The delay time will take the minimum value.

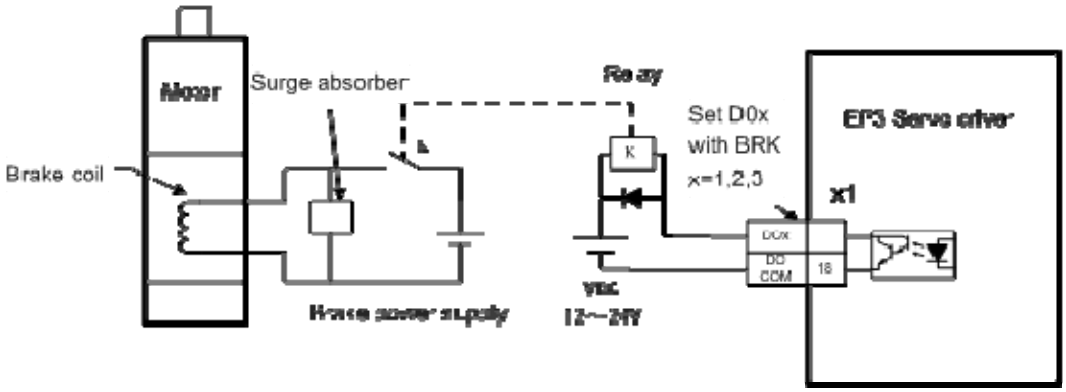

Remarks

Chapter 5 Parameters

5.1 Parameter table

The usage item in the table indicates the suitable control mode. “P” stands for the position control; “S” stands for the speed control; “T” stands for the torque control; “M” stands for Motion mode, “All” stands for the position, speed, and torque control. The“*”indicates default value that may be different.

5.1.1 Parameters of section 0

Parameter	Name	Range	Default value	Unit	Usage
P000	Password	0～9999	315		ALL
P001	Identity code of servo driver	*	*		ALL
P002	Identity code of servomotor	*	*		ALL
P003	Software edition	*	*		ALL
P004	Control mode	0～5	0		ALL
P005	First gain of speed loop	1～3000	40	Hz	P,S
P006	First integral time constant of speed loop	1.0～1000.0	20.0	ms	P,S
P007	First filter time constant of torque	0.10～50.00	2.50	ms	ALL
P009	First gain of position loop	1～1000	40	1/s	P
P010	Second gain of speed loop	1～3000	40	Hz	P,S
P011	Second integral time constant of speed loop	1.0～1000.0	20.0	ms	P,S
P012	Second filter time constant of torque	0.10～50.00	2.50	ms	ALL
P013	Second gain of position loop	1～1000	40	1/s	P
P017	Inertia ratio of load	0.0～200.0	1.0	times	P,S
P018	Control coefficient PDFF of speed loop	0～100	100	%	P,S
P019	Time constant of filter for speed detection	0.50～50.00	2.50	ms	P,S
P021	Feed forward gain of position loop	0～100	0	%	P
P022	Time constant of feed forward filter for position loop	0.20～50.00	1.00	ms	P
P025	Sources of speed command	0～5	0		S
P026	Sources of torque command	0～2	0		T
P027	Encoder pulse factor 1 (Absolute type	1～32767	10000		P

	only)				
P028	Encoder pulse factor 2 (Absolute type only)	1～32767	1		P
P029	First numerator of electronic gear for command pulse	1～32767	1		P
P030	Denominator of electronic gear for command pulse	1～32767	1		P
P031	Second numerator of electronic gear for command pulse	1～32767	1		P
P032	Third numerator of electronic gear for command pulse	1～32767	1		P
P033	Fourth numerator of electronic gear for command pulse	1～32767	1		P
P035	Input mode of command pulse	0～2	0		P
P036	Input direction of command pulse	0～1	0		P
P037	Input signal logic of command pulse	0～3	0		P
P038	input signal filter of command pulse	0～21	7		P
P039	Input filter mode of command pulse	0～1	0		P
P040	Time-constant of exponential form filter for position command	0～1000	0	ms	P
P046	Gain of analog speed command	10～3000	300	r/min/V	S
P047	Zero offset compensation of analog speed command	-1500.0～1500.0	0.0	mv	S
P048	Direction of analog speed command	0～1	0		S
P049	Time constant of filter for analog speed command	0.20～50.00	2.00	ms	S
P050	Polarity of analog speed command	0～2	0		S
P051	Dead zone 1 of analog speed command	0～13000	0	mv	S
P052	Dead zone 2 of analog speed command	-13000～0	0	mv	S
P053	Gain of analog torque command	1～300	30	%/V	T
P054	Zero offset compensation of analog torque command	-1500.0～1500.0	0.0	mv	T
P055	Direction of analog torque command	0～1	0		T
P056	Time constant of filter for analog torque command	0.20～50.00	2.00	ms	T
P057	Polarity of analog torque command	0～2	0		T
P060	Acceleration time of speed command	0～30000	0	ms	S
P061	Deceleration time of speed command	0～30000	0	ms	S
P064	Torque limit selection	0～2	0		ALL

P065	Internal torque limit in CCW direction	0～300	300	%	ALL
P066	Internal torque limit in CW direction	-300～0	-300	%	ALL
P067	External torque limit in CCW direction	0～300	100	%	ALL
P068	External torque limit in CW direction	-300～0	-100	%	ALL
P069	Torque limit in trial running	0～300	100	%	ALL
P070	Alarm level of torque overload in CCW direction	0～300	300	%	ALL
P071	Alarm level of torque overload in CW direction	-300～0	-300	%	ALL
P072	Detection time for torque overload alarm	0～10000	0	10ms	ALL
P075	Maximum speed limit	0～6000	3500	r/min	ALL
P076	JOG running speed	0～5000	100	r/min	S
P077	Selection of speed limit	0～2	0		T
P078	Speed limit in torque control	0～5000	3000	r/min	T
P079	Speed limit error in torque control	1～5000	100	r/min	T
P080	Position deviation limit	0.00～327.67	4.00	ring	P
P084	brake resistor option switch	0～1	0		ALL
P085	The value of external brake resistor	1～750	50	Ω	ALL
P086	The power of external brake resistor	1～10000	60	W	ALL
P089	The resolution of resolver	0～3	0		ALL
P090	Absolute positon encoder type (only absolute type.)	0～1	0		ALL
P093	fan alarm on	0～1	1		ALL
P094	The switching temperature point of fan	25~125	50	℃	ALL
P096	Items of initial display	0～22	0		ALL
P097	Neglect inhibition of servo driver	0～3	3		ALL
P098	Forced enable	0~1	0		ALL

5.1.2 Parameters of section 1

parameter	name	range	Default value	unit	usage
P100	Function of digital input DI1	-30～30	1		ALL
P101	Function of digital input DI2	-30～30	2		ALL
P102	Function of digital input DI3	-30～30	3		ALL
P103	Function of digital input DI4	-30～30	4		ALL
P104	Function of digital input DI5	-30～30	20		ALL
P110	Filter of digital input DI1	0.1～100.0	2.0	ms	ALL
P111	Filter of digital input DI2	0.1～100.0	2.0	ms	ALL
P112	Filter of digital input DI3	0.1～100.0	2.0	ms	ALL
P113	Filter of digital input DI4	0.1～100.0	2.0	ms	ALL
P114	Filter of digital input DI5	0.1～100.0	2.0	ms	ALL
P120	First group function of DI digital inputs	00000～11111	00000		ALL
P121	Second group function of DI digital inputs	00000～11111	00000		ALL
P122	third group function of DI digital inputs	00000～11111	00000		ALL
P123	Fourth group function of DI digital inputs	00000～11111	00000		ALL
P124	Fifth group function of DI digital inputs	00000～11111	00000		ALL
P130	Function of digital output DO1	-14～14	2		ALL
P131	Function of digital output DO2	-14～14	3		ALL
P132	Function of digital output DO3	-14～14	8		ALL
P137	Internal speed 1	-5000～5000	0	r/min	S
P138	Internal speed 2	-5000～5000	0	r/min	S
P139	Internal speed 3	-5000～5000	0	r/min	S
P140	Internal speed 4	-5000～5000	0	r/min	S
P141	Internal speed 5	-5000～5000	0	r/min	S
P142	Internal speed 6	-5000～5000	0	r/min	S
P143	Internal speed 7	-5000～5000	0	r/min	S
P144	Internal speed 8	-5000～5000	0	r/min	S
P145	Internal torque 1	-300～300	0	%	T
P146	Internal torque 2	-300～300	0	%	T
P147	Internal torque 3	-300～300	0	%	T
P148	Internal torque 4	-300～300	0	%	T
P150	Range for positioning completion	0～32767	10	pulse	P

parameter	name	range	Default value	unit	usage
P151	Hysteresis for positioning completion	0～32767	5	pulse	P
P152	Range for approach positioning	0～32767	500	pulse	P
P153	Hysteresis for approach positioning	0～32767	50	pulse	P
P154	Arrival speed	-5000～5000	500	r/min	ALL
P155	Hysteresis of arrival speed	0～5000	30	r/min	ALL
P156	Polarity of arrival speed	0～1	0		ALL
P157	Arrival torque	-300～300	100	%	ALL
P158	Hysteresis of arrival torque	0～300	5	%	ALL
P159	Polarity of arrival torque	0～1	0		ALL
P160	Range for zero speed detection	0～1000	10	r/min	ALL
P161	Hysteresis for zero speed detection	0～1000	5	r/min	ALL
P162	Zero speed clamp mode	0～1	0		S
P163	The way of position deviation clearing	0～1	0		P
P165	Speed check point for servomotor is near standstill	0～1000	5	r/min	ALL
P166	Delay time for electromagnetic brake when servomotor is in standstill	0～2000	0	ms	ALL
P167	Waiting time for electromagnetic brake when servomotor is in motion	0～2000	500	ms	ALL
P168	Action speed for electromagnetic brake when servomotor is in motion	0～3000	100	r/min	ALL
P169	The delay time of opening electromagnetic brake	0～1000	0	ms	ALL
P170	Encoder output pulse fractional frequency numerator	1～31	1		ALL
P171	Encoder output pulse fractional frequency denominator	1～31	1		ALL
P172	absolute encoder output line number	1～16384	2500		ALL
P173	Encoder output B pulse phase	0～1	0		ALL
P174	Encoder output Z pulse phase	0～1	0		ALL
P175	Encoder output Z pulse width	0～15	0		ALL
P178	Trigger mode of homing	0～3	0		ALL
P179	Reference mode of homing	0～5	0		ALL
P180	Origin mode of homing	0～2	0		ALL
P181	misalignment top digit of homing	-32768～32767	0	10000 pulse	ALL

parameter	name	range	Default value	unit	usage
P182	misalignment bottom digit of homing	-9999～9999	0	pulse	ALL
P183	First speed of homing	1～3000	500	r/min	ALL
P184	Second speed of homing	1～3000	50	r/min	ALL
P185	Acceleration time of homing	0～30000	0	ms	ALL
P186	Deceleration time of homing	0～30000	0	ms	ALL
P187	Positioning time delay of homing	0～3000	50	ms	ALL
P188	Delay time of complete signal after homing	1～3000	100	ms	ALL
P189	Command executive mode after homing	0～1	0		ALL

5.1.3 Parameters of section 2

parameter	name	range	default value	unit	usage
P200	Frequency of first notch filter	50～1500	1500	Hz	ALL
P201	Quality factor of first notch filter	1～100	7		ALL
P202	Depth of first notch filter	0～100	0	%	ALL
P203	Frequency of second notch filter	50～1500	1500	Hz	ALL
P204	Quality factor of second notch filter	1～100	7		ALL
P205	Depth of second notch filter	0～100	0	%	ALL
P208	Gain switching selection	0～5	0		ALL
P209	Level of gain switching	0～32767	100		ALL
P210	Level hysteresis of gain switching	0～32767	5		ALL
P211	Delay time of gain switching	0～3000	5	ms	ALL
P212	Time of gain switching	0～3000	5	ms	ALL

5.1.4 Parameters of section 3

Parameter	Name	Range	Default value	Unit	Usage
P300	ID number of drive	1～32	1		ALL
P301	MODBUS communication baud rate	0～6	0		ALL
P302	MODBUS communication protocol option	0～5	4		ALL
P305	Motion mode enabled	0～1	0		ALL
P309	Default target speed	0～6000	100	rpm	M
P310	Target speed 1	-5000～5000	0	rpm	M
P311	Target speed 2	-5000～5000	0	rpm	M
P312	Target speed 3	-5000～5000	0	rpm	M
P313	Target speed 4	-5000～5000	0	rpm	M
P314	Target speed 5	-5000～5000	0	rpm	M
P315	Target speed 6	-5000～5000	0	rpm	M
P316	Target speed 7	-5000～5000	0	rpm	M
P317	Target speed 8	-5000～5000	0	rpm	M
P330	Accelerate and decelerate time 1	30～10000	1000	ms	M
P331	Accelerate and decelerate time 2	30～10000	1000	ms	M
P332	Accelerate and decelerate time 3	30～10000	1000	ms	M
P333	Accelerate and decelerate time 4	30～10000	1000	ms	M
P334	Accelerate and decelerate time 5	30～10000	1000	ms	M
P335	Accelerate and decelerate time 6	30～10000	1000	ms	M
P336	Accelerate and decelerate time 7	30～10000	1000	ms	M
P337	Accelerate and decelerate time 8	30～10000	1000	ms	M
P350	The delay time 1 after the path finished	0～32767	0	ms	M
P351	The delay time 2 after the path finished	0～32767	0	ms	M
P352	The delay time 3 after the path finished	0～32767	0	ms	M
P353	The delay time 4 after the path finished	0～32767	0	ms	M
P354	The delay time 5 after the path finished	0～32767	0	ms	M
P355	The delay time 6 after the path finished	0～32767	0	ms	M
P356	The delay time 7 after the path finished	0～32767	0	ms	M
P357	The delay time 8 after the path finished	0～32767	0	ms	M

5.1.5 Parameters of section 4

Parameter	Name	Range	Default value	Unit	Usage
P400	Path 1 control word low 16 bits	-32768～32767	0		M
P401	Path 1 control word high 16 bits	-32768～32767	0		M
P402	Path 2 control word low 16 bits	-32768～32767	0		M
P403	Path 2 control word high 16 bits	-32768～32767	0		M
P404	Path 3 control word low 16 bits	-32768～32767	0		M
P405	Path 3 control word high 16 bits	-32768～32767	0		M
P406	Path 4 control word low 16 bits	-32768～32767	0		M
P407	Path 4 control word high 16 bits	-32768～32767	0		M
P408	Path 5 control word low 16 bits	-32768～32767	0		M
P409	Path 5 control word high 16 bits	-32768～32767	0		M
P410	Path 6 control word low 16 bits	-32768～32767	0		M
P411	Path 6 control word high 16 bits	-32768～32767	0		M
P412	Path 7 control word low 16 bits	-32768～32767	0		M
P413	Path 8 control word high 16 bits	-32768～32767	0		M
P414	Path 8 control word low 16 bits	-32768～32767	0		M
P415	Path 8 control word high 16 bits	-32768～32767	0		M

5.1.6 Parameters of section 5

Parameter	Name	Range	Default value	Unit	Usage
P500	Path 1 control word low 16 bits	-32768～32767	0		M
P501	Path 1 control word high 16 bits	-32768～32767	0		M
P502	Path 2 control word low 16 bits	-32768～32767	0		M
P503	Path21 control word high 16 bits	-32768～32767	0		M
P504	Path 3 control word low 16 bits	-32768～32767	0		M
P505	Path 3 control word high 16 bits	-32768～32767	0		M
P506	Path 4 control word low 16 bits	-32768～32767	0		M
P507	Path 4 control word high 16 bits	-32768～32767	0		M
P508	Path 5 control word low 16 bits	-32768～32767	0		M
P509	Path 5 control word high 16 bits	-32768～32767	0		M
P510	Path 5 control word low 16 bits	-32768～32767	0		M
P511	Path 6 control word high 16 bits	-32768～32767	0		M
P512	Path 7 control word low 16 bits	-32768～32767	0		M
P513	Path 7 control word high 16 bits	-32768～32767	0		M
P514	Path 8 control word low 16 bits	-32768～32767	0		M
P515	Path 8 control word high 16 bits	-32768～32767	0		M

5.2 DI function table

Ordinal	Symbol	DI Function	Ordinal	Symbol	DI Function
0	NULL	Not have function	16	CMODE	Control mode switching
1	SON	Servo enable	17	GAIN	Gain switching
2	ARST	Clear alarm	18	GEAR1	Electronic gear switching 1
3	CCWL	CCW drive inhibition	19	GEAR2	Electronic gear switching 2
4	CWL	CW drive inhibition	20	CLR	Clear position deviation
5	TCCW	CCW torque limitation	21	INH	Pulse input inhibition
6	TCW	CW torque limitation	22	PC	Proportional control
7	ZCLA MP	Zero speed clamp	23	GOH	Homing triggering
8	CZERO	Zero command	24	REF	Reference point of homing
9	CINV	Command reverse	25	SEN	Upper computer requires absolute position
10	SP1	Internal speed selection 1	26	MMODE	Motion mode trigger
11	SP2	Internal speed selection 2	27	CTRG	Motion command trigger
12	SP3	Internal speed selection 3	28	MDATA1	Motion command choose 1
13	TRQ1	Internal torque selection 1	29	MDATA2	Motion command choose 2
14	TRQ2	Internal torque selection 2	30	MDATA3	Motion command choose 3
15	EMG	Emergency stop			

5.3 DO function table

Ordinal	Symbol	DO Function	Ordinal	Symbol	DO Function
0	OFF	Always invalid	8	BRK	Electromagnetic brake
1	ON	Always valid	9	RUN	Servo is in motion
2	RDY	Servo ready	10	NEAR	Near positioning
3	ALM	Alarm	11	TRQL	Torque under limitation
4	ZSP	Zero speed	12	SPL	Speed under limitation
5	COIN	Positioning complete	13	HOME	Homing complete
6	ASP	Arrival speed	14	MDONE	Motion path complete
7	ATRQ	Arrival torque			

5.4 Parameter description in detail

5.4.1 Parameters of section 0

P000	Password	Range	Default value	Unit	Usage
		0～9999	315		ALL

- Classifying parameter management can guarantee the parameters cannot modify by mistake.
- Setting this parameter as 315 can examine, modify the parameters of the 0, 1, and 2 sections. For other setting only can examine, but cannot modify parameters.
- Some special operations need to set a suitable password.

P001	Identity code of servo driver	Range	Default value	Unit	适用 Usage
		*	*		ALL

- This is the model of the servo driver in sue now. The manufacturer sets it and the user cannot modify it.

P002	Identity code of servomotor	Range	Default value	Unit	Usage
		*	*		ALL

- The model code of the servomotor in use now is set when it is out of factory.
- The meaning of this parameter refers to the match table of servomotor in 8.4 chapter.
- It is necessary to modify this parameter when different model of servomotor is in usage. The detailed operation refers to the 3.7 chapter.
- This parameter has no meaning for the absolute type.

P003	Software version	Range	Default value	Unit	Usage
		*	*		ALL

- This is the software version number and cannot be modified.

P004	Control mode	Range	Default value	Unit	Usage
		0～5	0		ALL

- The meanings of this parameter are:
  0：Position control mode
  1：Speed control mode
  2：Torque control mode
  3：Position/speed control mode
  4：Position/torque control mode
  5：Speed/torque control mode

- When the parameter is 3 , 4 or 5.The concrete control mode depends on the CMODE of DI inputs:

P004	CMODE[Note]	Control mode
3	0	Position control
	1	Speed control
4	0	Position control
	1	Torque control
5	0	Speed control
	1	Torque control

Note: 0 indicates OFF; 1 indicates ON.

P005	First gain of speed loop	Range	Default value	Unit	Usage
		1～3000	40	Hz	P,S

- This is the proportion gain of the speed regulator. Increases the parameter value, can make the speed response to speed up. It is easy to cause the vibration and the noise when the value is too large.
- If the P017 (load inertia ratio) is a correct value then the parameter value is equal to the speed response bandwidth.

P006	First integral time constant of speed loop	Range	Default value	Unit	Usage
		1.0～1000.0	20.0	ms	P,S

- This is the integral time constant of the speed regulator. Reduces the parameter value, can reduce the speed control error, and increase rigidity. It is easy to cause the vibration and the noise when the value is too small.
- If using the maximum value (1000.0) indicates the integral function to be canceled. The speed regulator becomes the P controller.

P007	First filter time constant of torque	Range	Default value	Unit	Usage
		0.10～50.00	2.50	ms	ALL

- This is the low pass filter of torque and can suppress the vibration of the machinery.
- The bigger the value, the better effect of suppression achieves. The response will slow down. It is easy to cause oscillation if the value is too large. The smaller the value, the quicker response achieves, but can be limited by mechanical condition.
- When the load inertia is small, can set a small value; the load inertia is big, can set a big value.

P009	First gain of position loop	Range	Default value	Unit	Usage
		1～1000	40	1/s	P

- This is the proportional gain of the position regulator. Increases the parameter value, can

reduce the position tracking error, and enhance the response. It is easy to cause overshoot or oscillation when the value is too large.

P010	Second gain of speed loop	Range	Default value	Unit	Usage
		1～3000	40	Hz	P,S

- Refer to the description of the P005 parameter. It is necessary to set this parameter when begins using the gain switching function

P011	Second integral time constant of speed loop	Range	Default value	Unit	Usage
		1.0～1000.0	20.0	ms	P,S

- Refer to the description of the P006 parameter. It is necessary to set this parameter when begins using the gain switching function.

P012	Second filter time constant of torque	Range	Default value	Unit	Usage
		0.10～50.00	2.50	ms	ALL

- Refer to the description of the P007 parameter. It is necessary to set this parameter when begins using the gain switching function.

P013	Second gain of position loop	Range	Default value	Unit	Usage
		1～1000	40	1/s	P

- Refer to the description of the P009 parameter. It is necessary to set this parameter when begins using the gain switching function.

P017	Inertia ratio of load	Range	Default value	Unit	Usage
		0.0～200.0	1.0	times	P,S

- The load inertia ratio is that the inertia of mechanical load (refers to servomotor shaft) divides by the rotor inertia of the servomotor.

P018	Control coefficient PDFF of speed loop	Range	Default value	Unit	Usage
		0～100	100	%	P,S

- Using this PDFF coefficient of speed regulator can choose the structure of the speed controller. “0” and “100” are the IP regulator. 1 to 99 is the PDFF regulator.
- The smaller value of the parameter can get the higher stiffness (anti-deviation ability) of the system. The medium value takes account to both frequency response and stiffness.

P019	Time constant of filter for speed detection	Range	Default value	Unit	Usage
		0.50～50.00	2.50	ms	P,S

- The bigger value of parameter can get the smoother detected speed signal. The smaller value of parameter can get the quicker responded signal, but it will cause noise if the value

is too small. In addition, it will cause oscillation if the value is too big.

P021	Feed forward gain of position loop	Range	Default value	Unit	Usage
		0～100	0	%	P

- The feed forward can reduce position-tracking error in the position control mode. Under any frequency command pulse the position-tracking error always becomes zero if the parameter setting value is 100.
- Increasing the parameter value enhance the response of position control. It is easy to cause the system to be unstable, oscillation if the parameter value is too large.

P022	Time constant of feed forward filter for position loop	Range	Default value	Unit	Usage
		0.20～50.00	1.00	ms	P

- For filtering the feed forward signal in position loop. This function is to increase the stability of feed forward control.

P025	Sources of speed command	Range	Default value	Unit	Usage
		0～5	0		S

- Set the source of the speed command in speed control mode.
- The meanings of this parameter are:

  0：Analog speed command come from terminal AS and AS- inputs.

  1：Internal speed command is determined by SP1, SP2, and SP3 from DI inputs.

DI Signals[note]			Speed command
SP3	SP2	SP1	
0	0	0	Internal speed1 (parameter P137)
0	0	1	Internal speed 2 (parameter P138)
0	1	0	Internal speed 3 (parameter P139)
0	1	1	Internal speed 4 (parameter P140)
1	0	0	Internal speed 5 (parameter P141)
1	0	1	Internal speed 6 (parameter P142)
1	1	0	Internal speed 7 (parameter P143)
1	1	1	Internal speed 8 (parameter P144)

Note: 0 indicates OFF; 1 indicates ON.

2：Analog speed command plus internal speed command:

DI Signals[note]			Speed command
SP3	SP2	SP1	
0	0	0	Analog speed command
0	0	1	Internal speed2 (parameter P138)
0	1	0	Internal speed 3 (parameter P139)
0	1	1	Internal speed 4 (parameter P140)
1	0	0	Internal speed 5 (parameter P141)
1	0	1	Internal speed 6 (parameter P142)
1	1	0	Internal speed 7 (parameter P143)
1	1	1	Internal speed 8 (parameter P144)

Note: 0 indicates OFF; 1 indicates ON.

3：This is the JOG speed command. It needs to set this parameter when begins using the JOG operation.

4：This is the button speed command. It needs to set this parameter when begins using the (Sr) operation.

5：This is the demonstration speed command. It needs to set this parameter when begins using the demonstration operation. The speed command can change automatically.

P026	Sources of torque command	Range	Default value	Unit	Usage
		0～2	0		T

- Set the source of the torque command in torque control mode.
- The meanings of this parameter are:

0：Analog torque command come from terminal AS and AS- inputs.

1：Internal torque command is determined by TRQ1 and TRQ2 from DI inputs.

DI Signals[note]		Torque command
TRQ2	TRQ1	
0	0	Internal torque 1 (parameterP145)

0	1	Internal torque 2 (parameterP146)
1	0	Internal torque 3 (parameterP147)
1	1	Internal torque 4 (parameterP148)

Note: 0 indicates OFF; 1 indicates ON.

2: Analog torque command plus internal torque command:

DI Signal[note]		Torque command
TRQ2	TRQ1	
0	0	Analog torque command
0	1	Internal torque 2 (parameterP146)
1	0	Internal torque 3 (parameterP147)
1	1	Internal torque 4 (parameterP148)

Note: 0 indicates OFF; 1 indicates ON.

P027	Encoder pulse factor 1	Range	Default value	Unit	Usage
		1～32767	10000		P

- In position control, set the command pulse number needed by the motor rotating for one circle under the default circumstance (electronic gear ratio is 1:1)
  The default value of P027 is 10000, and P028 is 1
  PLUSE= P027×P028=10000×1=10000 means that the motor rotating for one circle needs 10000 command pulse when the electronic gear ratio is 1:1
- In this example, original resolution of 17 bits absolute type is 2^{17}= 131072. Users should ensure the result of P027×P028 is not more than 131072.

P028	Encoder pulse factor 2	Range	Default value	Unit	Usage
		1～32767	1		P

The using method of encoder pulse factor 2 can refer to the instruction of parameter P027.

P029	First numerator of electronic gear for command pulse	Range	Default value	Unit	Usage
		1～32767	1		P

- Use the frequency division or multiplication for the input pulse and can conveniently match with each kind of pulse source, also can achieve the pulse resolution for the user needs.

- The electronic gear numerator N of command pulse is determined by GEAR1 and GEAR2 from DI inputs. The denominator M is set by parameter P030.

DI Signals [note]		Numerator of electronic gear for command pulse N
GEAR2	GEAR1	
0	0	First numerator (parameter P029)
0	1	Second numerator (parameter P031)
1	0	Third numerator (parameter P032)
1	1	Fourth numerator (parameter P033)

Note: 0 indicates OFF; 1 indicates ON.

- The input pulse command becomes the position command by the N/M factor. The ratio range is: 1/50<N/M<200

P030	Denominator of electronic gear for command pulse	Range	Default value	Unit	Usage
		1～32767	1		P

- This is electronic gear denominator M of command pulse. The application method refers to parameter P029.

P031	Second numerator of electronic gear for command pulse	Range	Default value	Unit	Usage
		1～32767	1		P

- Refer to the explanation of parameter P029.

P032	Third numerator of electronic gear for command pulse	Range	Default value	Unit	Usage
		1～32767	1		P

- Refer to the explanation of parameter P029.

P033	Fourth numerator of electronic gear for command pulse	Range	Default value	Unit	Usage
		1～32767	1		P

- Refer to the explanation of parameter P029.

P035	Input mode of command pulse	Range	Default value	Unit	Usage
		0～2	0		P

- Set the input mode of command pulse. The meanings of this parameter are:

0：Pulse + direction

1：Positive/Reverse pulse

2：Orthogonal pulse

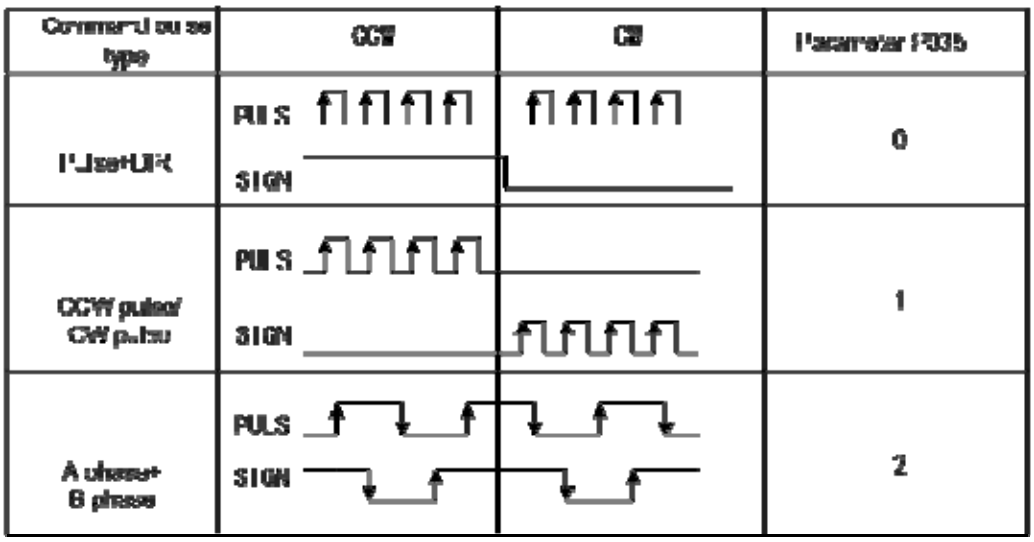

Note: The arrow indicates the counting edge when P036=0, P037=0.

- The diagram of command pulse inputs

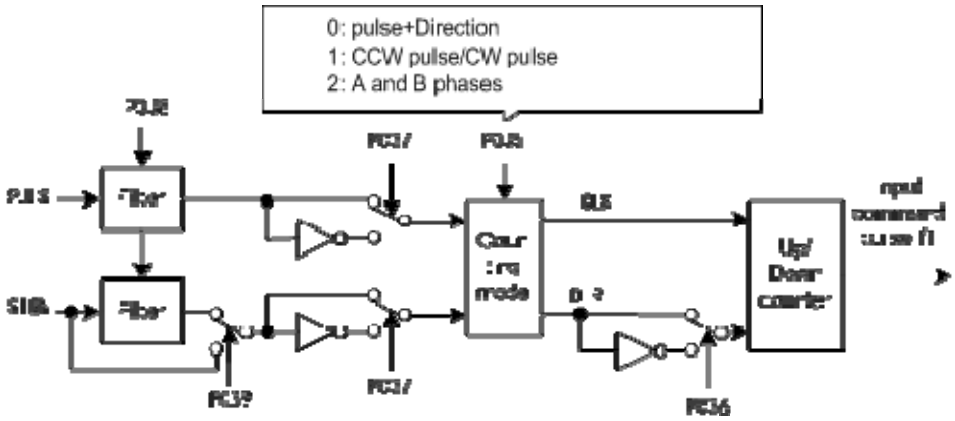

- The parameter needs to preserve firstly and then turn off and on the power supply.

P036	Input direction of command pulse	Range	Default value	Unit	Usage
		0～1	0		P

- The meanings of this parameter are:

0：Normal direction

1：Direction reverse

P037	Input signal logic of command pulse	Range	Default value	Unit	Usage

P037	Input signal logic of command pulse	Range	Default value	Unit	Usage
		0～3	0		P

- Set the phase of the input pulse signals PULS and SIGN for adjusting the counting edge as well as the counting direction.

P037	PULS signal phase	SIGN signal phase
0	In phase	In phase
1	Opposite phase	In phase
2	In phase	Opposite phase
3	Opposite phase	Opposite phase

- The parameter needs to preserve firstly and then turn off and on the power supply.

P038	Input signal filter of command pulse	Range	Default value	Unit	Usage
		0～21	7		P

- Filter the input signal PULS and SIGN numerically. The value is bigger then the filter time-constant is bigger.
- The maximum input pulse frequency is 500 kHz (kpps) when the setting value is seven. If the value is bigger, the maximum input pulse frequency will reduce correspondingly.
- Filter the noise from the input signal to avoid counting mistake. Because if found the running not perfect caused by the counting pulse, then can suitably increase the parameter value.
- The parameter needs to preserve firstly and then turn off and on the power supply.

P039	Input filter mode of command pulse I	Range	Default value	Unit	Usage
		0～1	0		P

- The meanings of this parameter are:
  0：Filter the input signal PULS and SIGN numerically.
  1：Filter the input signal PULS only and not filter the SIGN signal.
- The parameter needs to preserve firstly and then turn off and on the power supply.

P040	Time-constant of exponential form filter for position command	Range	Default value	Unit	Usage
		0～1000	0	ms	P

- Carries on the smooth filter to the command pulse and has the exponential form acceleration/deceleration. The filter cannot lose the input pulse, but can delay the command pulse. When the setting value is zero, the filter does not have any effect.
- This filter uses in some cases:
  1. The host controller has no acceleration/deceleration function;
  2. The electronic gear ratio is quite big (N/M>10);

3. The command frequency is lower;
4. When the servomotor is in motion appears step-by-steps or unstable phenomenon.

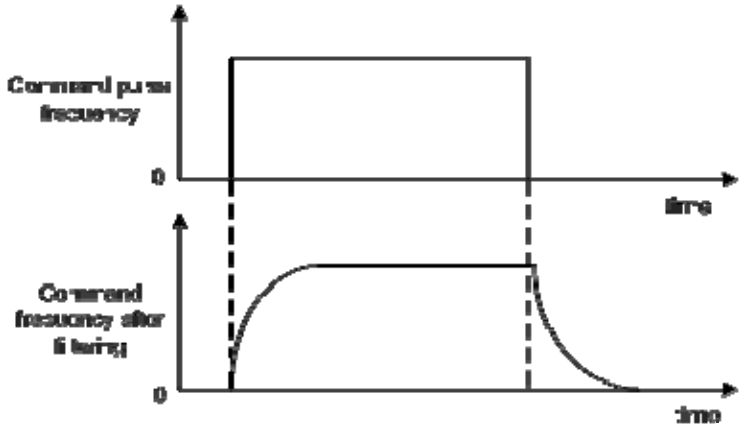

P046	Gain of analog speed command	Range	Default value	Unit	Usage
		10～3000	300	r/min/V	S

- This proportional coefficient is that the servomotor actual speed divides by the analog input voltage.
- The analog input voltage is in the range from -10V to 10V.

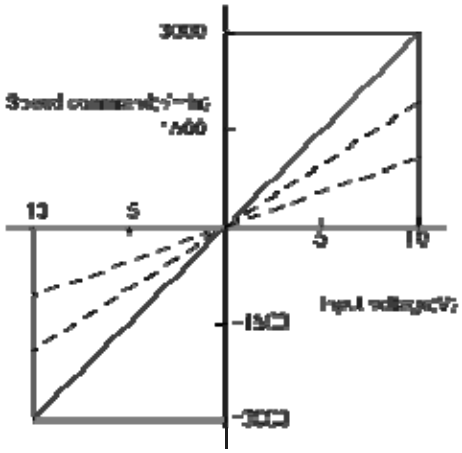

P047	Zero offset compensation of analog speed command	Range	Default value	Unit	Usage
		-1500.0～1500.0	0.0	mv	S

- This is the zero-bias compensation for analog speed input. The actual speed command is that the analog speed input minus this parameter value.
- By using the analog zero-bias auto-setting function this parameter is set automatically. Refer to 3.6.2 section.

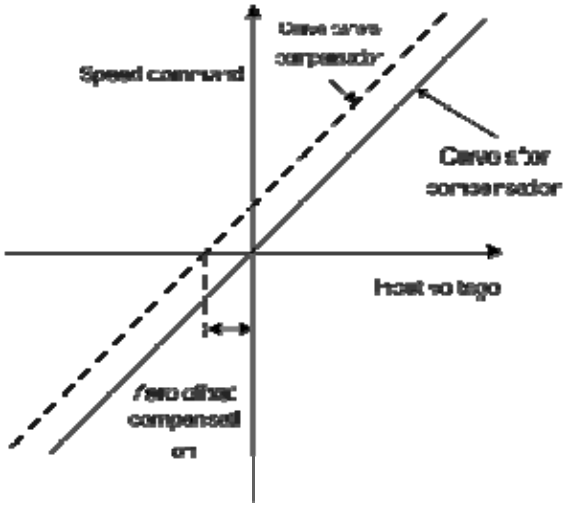

P048	Direction of analog speed command	Range	Default value	Unit	Usage
		0～1	0		S

- The meanings of this parameter are:

P048	Positive polarity (positive voltage) analog input	Negative polarity (negative voltage) analog input
0	CCW speed command	CW speed command
1	CW speed command	CCW speed command

P049	Time constant of filter for analog speed command	Range	Default value	Unit	Usage
		0.20～50.00	2.00	ms	S

- This is the low pass filter of the analog speed input.
- The bigger the value, the slower response of the analog speed input will be and it is advantageous in reducing the high frequency noise jamming; the smaller the value, the quicker speed response will be, but it increases high frequency noise jamming.

P050	Polarity of analog speed command	Range	Default value	Unit	Usage
		0～2	0		S

- The meanings of this parameter are:

0：Bipolarity.

1：Single positive polarity. The input positive polarity is effective, when negative polarity forces the input to be zero.

2：Single negative polarity.The input negative polarity is effective, when positive polarity forces the input to be zero.

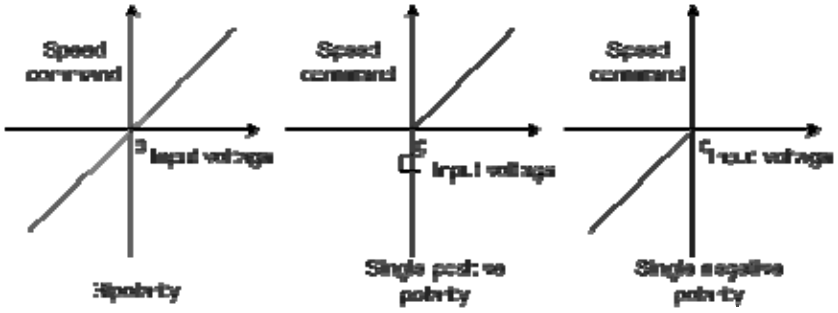

P051	Dead zone 1 of analog speed command	Range	Default value	Unit	Usage
		0～13000	0	mv	S

- When the input voltage is located between the second dead band (parameter P052) and the first dead band (Parameter P051) forces the input command to be zero.

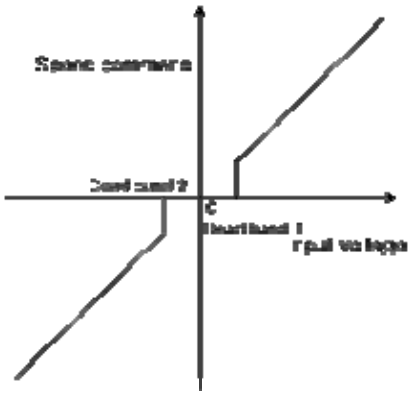

P052	Dead zone 2 of analog speed command	Range	Default value	Unit	Usage
		-13000～0	0	mv	S

- Refer to the explanation of parameter P051.

P053	Gain of analog torque command	Range	Default value	Unit	Usage
		1～300	30	%/V	T

- This proportional coefficient is that the servomotor actual torque divides by the analog input voltage. The unit of setting value is 1%/V.
- The analog input voltage is in the range from -10V to 10V.

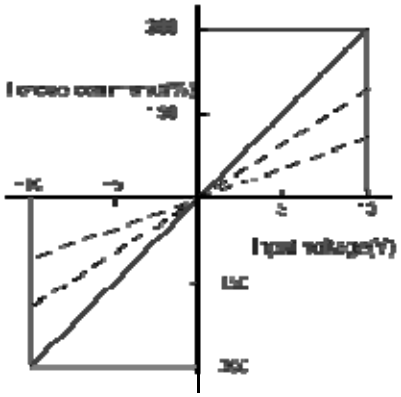

P054	Zero offset compensation of analog torque command	Range	Default value	Unit	Usage
		-1500.0～1500.0	0.0	mv	T

- This is the zero-bias compensation for analog torque input. The actual torque command is that the analog torque input minus this parameter value.
- By using the analog zero-bias auto-setting function this parameter is set automatically. Refer to 3.6.2 section.

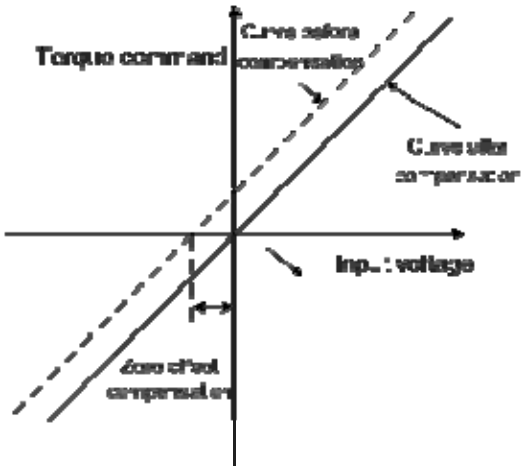

P055	Direction of analog torque command	Range	Default value	Unit	Usage
		0～1	0		T

- The meanings of this parameter are:

P055	Positive polarity (positive voltage) analog input	Negative polarity (negative voltage) analog input
0	CCW torque command	CW torque command
1	CW torque command	CCW torque command

P056	Time constant of filter for analog torque command	Range	Default value	Unit	Usage
		0.20～50.00	2.00	ms	T

- This is the low pass filter of the analog torque input.
- The bigger the value, the slower response of the analog speed input will be and it is advantageous in reducing the high frequency noise jamming; the smaller the value, the quicker speed response will be, but it increases high frequency noise jamming.

P057	Polarity of analog torque command	Range	Default value	Unit	Usage
		0～2	0		T

- The meanings of this parameter:

0：Bipolarity.

1：Single positive polarity. The input positive polarity is effective, when negative polarity forces the input to be zero.

2：Single negative polarity.The input negative polarity is effective, when positive polarity forces the input to be zero.

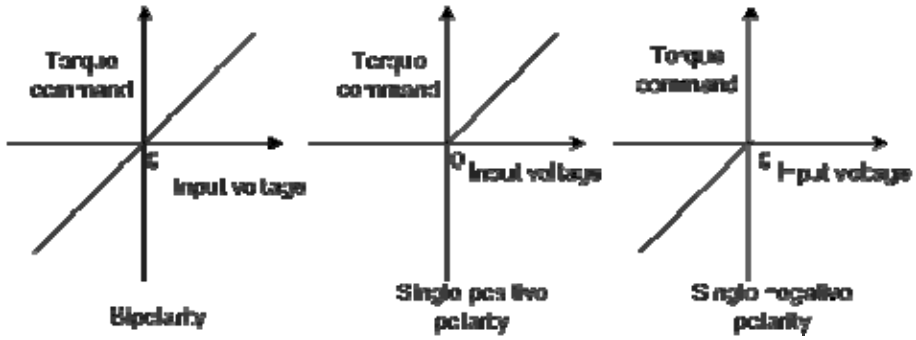

P060	Acceleration time of speed command	Range	Default value	Unit	Usage
		0～30000	0	ms	S

- Set the acceleration time for the servomotor from the zero speed up to rated speed.
- If the command speed is lower than the rated speed, the rise time also correspondingly reduces.
- Only uses in the speed control mode. It is invalid in position control mode.
- If the servo driver constitutes the position control with host controller, this parameter should be set zero, otherwise affects the position control performance.

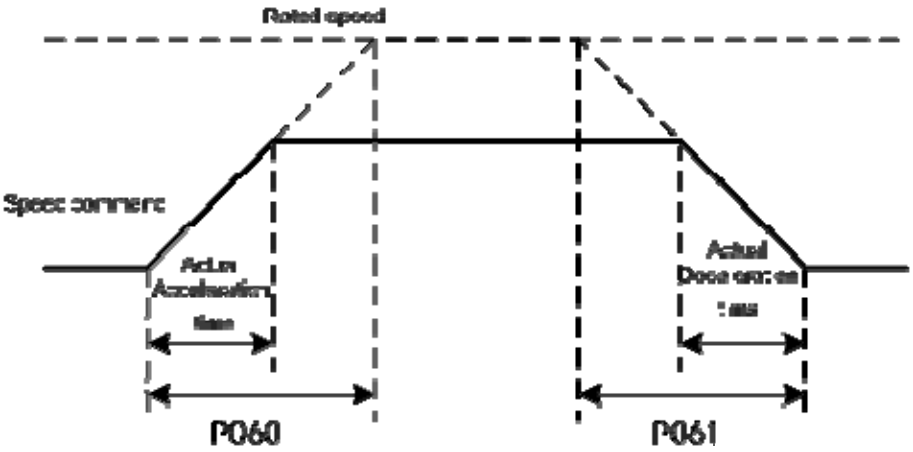

P061	Deceleration time of speed command	Range	Default value	Unit	Usage
		0～30000	0	ms	S

- Set the deceleration time for the servomotor from the rated speed down to zero speed.
- If the command speed is lower than the rated speed, the fall time also correspondingly reduces.
- Only uses in the speed control mode. It is invalid in position control mode.
- If the servo driver constitutes the position control with host controller, this parameter should be set zero, otherwise affects the position control performance.

P064	Torque limit selection	Range	Default value	Unit	Usage
		0～2	0		ALL

- Set torque limitation mode:

P064	Explanation	(CCW)	(CW)
0	Basic limit	Determines by TCCW from DI inputs： TCCW =OFF: parameterP065 TCCW =ON : parameterP067	Determines by TCW from DI inputs： TCW =OFF: parameterP066 TCW =ON : parameter P068
1	Basic limit + Analog limit	Except basic limit, it is also limited by analog torque command. Limitation does not relate to the rotation direction.	
2	Basic limit + Internal torque limit	Except basic limit, it is also limited by internal torque command. Limitation does not relate to the rotation direction. The internal torque command is determined	

		by TRQ1 and TRQ2 from DI inputs.

Note: 1. If many limits occur, the final limitation value will be the smallest value.

2. The limits of P065 and P066 are effective all the time.

3. Even if the setting value greater than the permission maximum torque of the system, but the operation also can limit in the maximum torque range.

P065	Internal torque limit in CCW direction	Range	Default value	Unit	Usage
		0～300	300	%	ALL

- Set the internal torque limitation value in CCW direction of servomotor.
- This limit is effective all the time.
- If the value surpasses the biggest overload capacity of the servo driver, then the actual limits will be equal to the biggest overload capacity.

P066	Internal torque limit in CW direction	Range	Default value	Unit	Usage
		-300～0	-300	%	ALL

- Set the internal torque limitation value in CW direction of servomotor.
- This limit is effective all the time.
- If the value surpasses the biggest overload capacity of the servo driver, then the actual limits will be equal to the biggest overload capacity.

P067	External torque limit in CCW direction	Range	Default value	Unit	Usage
		0～300	100	%	ALL

- Set the external torque limitation value in CCW direction of servomotor.
- This limit is effective if the TCCW (torque limit in CCW direction) is on by DI input.
- When limit is effective, the actual torque limitation will take the minimum value from the biggest overload capacity of the servo driver, the internal CCW torque limitation and the external CCW torque limitation.

P068	External torque limit in CW direction	Range	Default value	Unit	Usage
		-300～0	-100	%	ALL

- Set the external torque limitation value in CW direction of servomotor.
- This limit is effective if the TCW (torque limit in CW direction) is on by DI input.
- When limit is effective, the actual torque limitation will take the minimum value from the biggest overload capacity of the servo driver, the internal CCW torque limitation and the external CCW torque limitation.

P069	Torque limit in trial running	Range	default value	Unit	Usage
		0～300	100	%	ALL

- Set the torque limitation value for trial running mode (the speed JOG movement, the button

speed adjustment, the demonstration mode).

- The torque limitation is not related to the rotation direction. It is valid in both directions.
- The internal and the external torque limitation are still effective.

P070	Alarm level of torque overload in CCW direction	Range	Default value	Unit	Usage
		0～300	300	%	ALL

- Set the overload value of torque in (CCW) direction. This value indicates the percentage of rated torque.
- When the torque of the servomotor surpasses P070 and the duration is bigger than P072, then the servo driver alarms, and the servomotor stops. The number of the alarm is Err29.

P071	Alarm level of torque overload in CW direction	Range	Default value	Unit	Usage
		-300～0	-300	%	ALL

- Set the overload value of torque in (CW) direction. This value indicates the percentage of rated torque.
- When the torque of the servomotor surpasses P070 and the duration is bigger than P072, then the servo driver alarms, and the servomotor stops. The number of the alarm is Err29.

P072	Detection time for torque overload alarm	Range	Default value	Unit	Usage
		0～10000	0	10ms	ALL

- Refer to the explanation of parameter P070 and P071.
- The torque overload can be shielded if the setting value is zero.

P075	Maximum speed limit	Range	Default value	Unit	Usage
		0～6000	3500	r/min	ALL

- Set the permission highest speed of servomotor.
- The limit is effective in both CCW and CW direction.
- If the setting value surpasses the system permission the maximum speed, the actual speed also can limit in the maximum speed.

P076	JOG running speed	Range	Default value	Unit	Usage
		0～5000	100	r/min	S

- Set the running speed for JOG operation.

P077	Selection of speed limit	Range	Default value	Unit	Usage
		0～2	0		T

- Set the speed limitation mode for torque control. The speed limitation is effective in both CCW and CW direction.

P077	Explanation	Interpret
0	Basic limit	Limited by parameter P078。
1	Basic limit +Analog limit	Except basic limit, it is also limited by analog speed command
2	Basic limit + Internal speed limit	Except basic limit, it is also limited by internal speed command. The internal speed command is determined by SP1, SP2, and SP3 from DI inputs.

Note: 1.If many limits occur, the final limitation value will be the smallest value. If the setting value surpasses the system permission the maximum speed, the actual speed also can limit in the maximum speed.

P078	Speed limit in torque control	Range	Default value	Unit	Usage
		0～5000	3000	r/min	T

- The servomotor running speed limits in this parameter for torque control mode.
- Under light loading can prevent the servomotor from over speed.
- When appears over speed, turns on speed negative feedback to reduce the actual torque, but the actual speed can be higher than the limit value slightly.

P079	Speed limit error in torque control	Range	Default value	Unit	Usage
		1～5000	100	r/min	T

- This parameter can govern the quantity of speed negative feedback if the over speed appears.
- The smaller the value, the bigger negative feedback and the smaller over speed achieve; the limiting curve is steeper, but may cause shake if the value is too small.

P080	Position deviation limit	Range	Default value	Unit	Usage
		0.00～327.67	4.00	圈	P

- Set the position deviation range for alarm when the deviation exceeds this parameter.
- Under position control mode, when the counting value of position deviation counter exceeds the pulses corresponding to this parameter value, the servo driver gives the position deviation alarm (Err 4).
- The unit is one circle. Multiplying the resolution of encoder with the value of this parameter can obtain the total pulse number. For example, the encoder has 2500 lines and the resolution of encoder is 10000. If the parameter value is 4.00, then corresponds to 40000 pulses.

P084	The option switch of brake resistor	Range	Default value	Unit	Usage
		0～1	0		ALL

- The meanings of this parameter:
  0: adopting internal brake resistor.
  1: adopting external brake resistor.

P085	The value of external brake resistor	Range	Default value	Unit	Usage
		1～750	50	Ω	ALL

- Set this parameter according to the value of actual external brake resistor.
- This parameter is out of valid when internal brake resistor (P084=0) is adopted.

P086	The power of external brake resistor	Range	Default value	Unit	Usage
		1～10000	60	W	ALL

- Set this parameter according to the power of actual external brake resistor
- This parameter is out of valid when internal brake resistor (P084=0) is adopted.

P089	The resolution of resolver	Range	Default value	Unit	Usage
		0～3	0		ALL

- The meanings of this parameter:
  0: set the encoder resolution to 16 bits
  1: set the encoder resolution to 14 bits
  2: set the encoder resolution to 12 bits
  3: set the encoder resolution to 10 bits

P090	Absolute position encoder type (absolute type only)	Range	Default value	Unit	Usage
		0～1	0		ALL

- The meanings of this parameter:
  0: single-ring absolute encoder
  1: multi-turn absolute encoder
- The encoder can not reserve multi-turn information, when encoder has no external battery. Please set this parameter as 0.

P093	Fan alarm on	Range	Default value	Unit	Usage
		0～1	1		ALL

- The meanings of this parameter:
  0: Shield the fan fault alarm (except for special reasons, shield it is not suggested.)

1: allowing fan fault alarm

P094	turn on the fan and start the temperature point	Range	Default value	Unit	Usage
		25～125	50	℃	ALL

- When the module temperature is higher than this temperature, drive cooling fan begins to

work.

- When the module temperature is lower than this temperature, drive cooling fan stops working.

P096	Items of initial display	Range	Default value	Unit	Usage
		0～22	0		ALL

- Set the display status on the front panel after turn on the power supply. The meanings of this parameter are:

P096	Display item	P096	Display item
0	Speed of servomotor	12	Analog voltage of speed command
1	Original Position command	13	Analog voltage of torque command
2	Position command	14	DI Digital input DI
3	Position of servomotor	15	DO Digital output DO
4	Position deviation	16	Signals of encoder
5	Torque	17	Absolute position in one turn
6	Peak torque	18	Accumulative load ratio
7	Current	19	Brake ratio
8	Peak current	20	Control mode
9	Frequency of input pulse	21	Number of alarm
10	Speed command	22	Reserved
11	Torque command		

P097	Neglect inhibition of servo driver	Range	Default value	Unit	Usage
		0～3	3		ALL

- The prohibited positive travel (CCWL) and the prohibited reverse travel (CWL) from DI inputs are used for the limit traveling protection. Use normal closed switch as protecting switch. If the input from DI is ON, then the servomotor can move to this direction, or is OFF, cannot move to this direction. If does not use the limit traveling protection, can neglect it by modifying this parameter and does not need the CCWL and CWL wiring.
- The default value neglects the prohibition, if use this function, please modify this value first.
- The meanings of this parameter are:

P097	Motion inhibition in CW direction(CWL)	Motion inhibition in CCW direction(CCWL)
0	Use	Use
1	Use	Neglect

2	Neglect	Use
3	Neglect	Neglect

Use: When input signal is ON, the servomotor can move to this direction; When OFF the servomotor cannot move to this direction.

Neglect: The servomotor can move to this direction, and the prohibition signal does not have the function, therefore can disconnect this signal.

P098	Forced enable	Range	Default value	Unit	Usage
		0~1	0		ALL

- The meanings of this parameter are:
  0：The enable signal SON comes from inputs by DI;
  1：The enable signal comes from internal software.

5.4.2 Parameters of section 1

P100	Function of digital input DI1	Range	Default value	Unit	Usage
		-30～30	1		ALL

- The function plan of digital input DI1: the absolute value of the parameter expresses functions; the symbolic expresses the logic. Refer to the 5.5 sections for the functions.
- The symbolic expresses the input logic. Positive number expresses positive logic and the negative number express the negative logic. ON is effective, OFF is invalid:

Parameter	DI input signal	DI Result
Positive number	Turn off	OFF
	Turn on	ON
Negative number	Turn off	ON
	Turn on	OFF

- If set the same function for many input channel, the function results in logical 'or' relations. For example P100 and P101 are set by 1 (the SON function), then DI1 and/or DI2 is ON, the SON is effective.
- The input function which is not selected by parameter P100~P104, namely the undefined function, results in OFF (invalid).But has the exceptional case, the parameter P120~P124 can set to force input function ON (effectively), no matter this function has planned or not.

P101	Function of digital input DI2	Range	Default value	Unit	Usage
		-30～30	2		ALL

- The function plan of digital input DI2. Refer to the explanation of parameter P100.

P102	Function of digital input DI3	Range	Default value	Unit	Usage
		-30～30	3		ALL

- The function plan of digital input DI3. Refer to the explanation of parameter P100.

P103	Function of digital input DI4	Range	Default value	Unit	Usage
		-30～30	4		ALL

- The function plan of digital input DI4. Refer to the explanation of parameter P100.

P104	Function of digital input DI5	Range	Default value	Unit	Usage
		-30～30	20		ALL

- The function plan of digital input DI5. Refer to the explanation of parameter P100.

P110	Filter of digital input DI1	Range	Default value	Unit	Usage
		0.1～100.0	2.0	ms	ALL

- This is the time-constant of DI1 input digital filter.
- The smaller the value, the quicker signal responses; the bigger the value, the slower signal responses, but filtering ability of noise is stronger.

P111	Filter of digital input DI2	Range	Default value	Unit	Usage
		0.1～100.0	2.0	ms	ALL

- This is the time-constant of DI2 input digital filter. Refer to the explanation of parameter P110.

P112	Filter of digital input DI3	Range	Default value	Unit	Usage
		0.1～100.0	2.0	ms	ALL

- This is the time-constant of DI3 input digital filter. Refer to the explanation of parameter P110.

P113	Filter of digital input DI4	Range	Default value	Unit	Usage
		0.1～100.0	2.0	ms	ALL

- This is the time-constant of DI4 input digital filter. Refer to the explanation of parameter P110.

P114	Filter of digital input DI5	Range	Default value	Unit	Usage
		0.1～100.0	2.0	ms	ALL

- This is the time-constant of DI5 input digital filter. Refer to the explanation of parameter P110.

P120	Forced effect in DI digital inputs (group 1)	Range	Default value	Unit	Usage
		00000～11111	00000		ALL

- The function corresponding to 5 binary bit is as following:

Bit number	bit4	Bit3	Bit2	Bit1	bit0
Function	CWL	CCWL	ARST	SON	NULL

- Use in forcing the DI input function to be effective. If the corresponding bit of function is set, then this function forces ON (effectively).
- The meaning of DI symbol string refers to 5.5 sections.
- The meanings of this parameter are:

Certain bit of this parameter	Function[note]	Function result
0	Not yet planned	OFF
	Has planned	Determine by input signal
1	Not yet planned or has planned	ON

Note: 'Has planned' indicates the function which is selected by parameter P100~P104.
'Not yet planned' indicates the function which is not selected by parameter P100~P104.

P121	Forced effect in DI digital inputs (group 2)	Range	Default value	Unit	Usage
		00000～11111	00000		ALL

- The function corresponding to 5 binary bit is as following:

Bit number	bit4	bit3	bit2	bit1	bit0
Function	CINV	CZERO	ZCLAMP	TCW	TCCW

- Refer to the explanation of parameter P120 for others.

P122	Forced effect in DI digital inputs (group 3)	Range	Default value	Unit	Usage
		00000～11111	00000		ALL

- The function corresponding to 5 binary bit is as following:

Bit number	bit4	bit3	bit2	bit1	bit0
Function	TRQ2	TRQ1	SP3	SP2	SP1

- Refer to the explanation of parameter P120 for others.

P123	Forced effect in DI digital inputs (group 4)	Range	Default value	Unit	Usage
		00000～11111	00000		ALL

- The function corresponding to 5 binary bit is as following:

Bit number	bit4	bit3	bit2	bit1	bit0
Function	GEAR2	GEAR1	GAIN	CMODE	EMG

- Refer to the explanation of parameter P120 for others.

P124	Forced effect in DI digital inputs (group 5)	Range	Default value	Unit	Usage
		00000～11111	00000		ALL

- The function corresponding to 5 binary bit is as following:

Bit number	bit4	bit3	bit2	bit1	bit0
Function	REF	GOH	PC	INH	CLR

- Refer to the explanation of parameter P120 for others.

P130	Function of digital output DO1	Range	Default value	Unit	Usage
		-14～14	2		ALL

- The function plan of digital output DO1: The absolute value of the parameter expresses functions; the symbol expresses the logic, Refer to the 5.6 sections for the functions.
- '0' is forcing OFF, '1' is forcing ON.
- The symbol indicates the output logic; the positive number expresses the positive logic and the negative number expresses the negative logic:

Parameter value	Function	DO output signal
Positive number	ON	Turn on
	OFF	Turn off
Negative number	ON	Turn off
	OFF	Turn on

P131	Function of digital output DO2	Range	Default value	Unit	Usage
		-14～14	3		ALL

- This is the function plan of digital output DO2. Refer to the explanation of parameter P130.

P132	Function of digital output DO3	Range	Default value	Unit	Usage
		-14～14	8		ALL

- This is the function plan of digital output DO3. Refer to the explanation of parameter P130.

P137	1 Internal speed 1	Range	Default value	Unit	Usage
		-5000～5000	0	r/min	S

- This is the internal speed 1. Refer to the explanation of parameter P025.

P138	Internal speed 2	Range	Default value	Unit	Usage
		-5000～5000	0	r/min	S

- This is the internal speed 2. Refer to the explanation of parameter P025.

P139	Internal speed 3	Range	Default value	Unit	Usage
		-5000～5000	0	r/min	S

- This is the internal speed 3. Refer to the explanation of parameter P025.

P140	Internal speed 4	Range	Default value	Unit	Usage
		-5000～5000	0	r/min	S

- This is the internal speed 4. Refer to the explanation of parameter P025.

P141	Internal speed 5	Range	Default value	Unit	Usage
		-5000～5000	0	r/min	S

- This is the internal speed 5. Refer to the explanation of parameter P025.

P142	Internal speed 6	Range	Default value	Unit	Usage
		-5000～5000	0	r/min	S

- This is the internal speed 6. Refer to the explanation of parameter P025.

P143	Internal speed 7	Range	Default value	Unit	Usage
		-5000～5000	0	r/min	S

- This is the internal speed 7. Refer to the explanation of parameter P025.

P144	Internal speed 8	Range	Default value	Unit	Usage
		-5000～5000	0	r/min	S

- This is the internal speed 8. Refer to the explanation of parameter P025.

P145	Internal torque 1	Range	Default value	Unit	Usage
		-300～300	0	%	T

- This is the internal torque 1. Refer to the explanation of parameter P026.

P146	Internal torque 2	Range	Default value	Unit	Usage
		-300～300	0	%	T

- This is the internal torque 2. Refer to the explanation of parameter P026.

P147	Internal torque 3	Range	Default value	Unit	Usage
		-300～300	0	%	T

- This is the internal torque 3. Refer to the explanation of parameter P026.

P148	4 Internal torque 4	Range	Default value	Unit	Usage
		-300～300	0	%	T

- This is the internal torque 4. Refer to the explanation of parameter P026.

P150	Range for positioning completion	Range	Default value	Unit	Usage
		0～32767	10	pulse	P

- Set the pulse range for positioning completion under the position control mode.
- When the pulse number in the position deviation counter is smaller than or equal to this setting value, the digital output DO COIN is ON (positioning completion), otherwise is OFF.
- The comparator has hysteretic function set by parameter P151.

P151	Hysteresis for positioning completion	Range	Default value	Unit	Usage
		0～32767	5	pulse	P

- Refer to the explanation of parameter P150.

P152	Range for approach positioning	Range	Default value	Unit	Usage
		0～32767	500	pulse	P

- Set the pulse range for approach positioning under the position control mode.
- When the pulse number in the position deviation counter is smaller than or equal to this setting value, the digital output DO NEAR is ON (near position), otherwise is OFF.
- The comparator has hysteretic function set by parameter P153.
- Use this function in case that in near positioning, the host controller is accepting the NEAR signal to carry on the preparation to the next step. In general, the parameter value must be bigger than P150.

P153	Hysteresis for approach positioning	Range	Default value	Unit	Usage
		0～32767	50	pulse	P

- Refer to the explanation of parameter P152.

P154	Arrival speed	Range	Default value	Unit	Usage
		-5000～5000	500	r/min	ALL

- When the servomotor speed surpasses this parameter, the digital output DO ASP (speed arrives) is ON, otherwise is OFF.
- The comparator has hysteretic function set by parameter P155.
- Has the polarity setting function:

P156	P154	Comparator
0	>0	detect CCW or CW speed
1	>0	Only detect CCW speed
	<0	Only detect CW speed

P 155	Hysteresis of arrival speed	Range	Default value	Unit	Usage
		0～5000	30	r/min	ALL

- Refer to the explanation of parameter P154.

P156	Polarity of arrival speed	Range	Default value	Unit	Usage
		0～1	0		ALL

- Refer to the explanation of parameter P154.

P157	Arrival torque	Range	Default value	Unit	Usage
		-300～300	100	%	ALL

- When the servomotor torque surpasses this parameter, the digital output DO ATRQ (torque arrives) is ON, otherwise is OFF.
- The comparator has hysteretic function set by parameter P158.
- Has the polarity setting function:

P159	P157	Comparator
0	>0	detect CCW or CW torque
1	>0	Only detect CCW torque
	<0	Only detect CW torque

P158	Hysteresis of arrival torque	Range	Default value	Unit	Usage
		0～300	5	%	ALL

- Refer to the explanation of parameter P157.

P159	Polarity of arrival torque	Range	Default value	Unit	Usage
		0～1	0		ALL

- Refer to the explanation of parameter P157.

P160	Range for zero speed detection	Range	Default value	Unit	Usage
		0～1000	10	r/min	ALL

- When the speed of the servomotor is lower than this parameter, digital output DO ZSP (zero speed) is ON, otherwise is OFF.
- The comparator has hysteretic function set by parameter P161.

P161	Hysteresis for zero speed detection	Range	Default value	Unit	Usage
		0～1000	5	r/min	ALL

- Refer to the explanation of parameter P160.

P162	Zero speed clamp mode	Range	Default value	Unit	Usage
		0～1	0		S

- When the following conditions satisfies, the zero speed clamp function will start:
  Condition 1: In the speed control mode;
  Condition 2: The ZCLAMP (zero speed clamp) is ON from DI input;
  Condition 3: The speed command is lower than parameter P160.
- When any condition mentioned above does not satisfy, carries out the normal speed control.
- When zero speed clamp function started, the meanings of this parameter are:
  0：The position of the servomotor is fixed just when the clamp function starts. This time the servo driver itself changes to the position control mode, and keeps the fixed point even if an external force causes a displacement.
  1：The speed command is forced to zero when the clamp function starts. The servo driver is still in the speed control mode, but an external force can cause revolving.

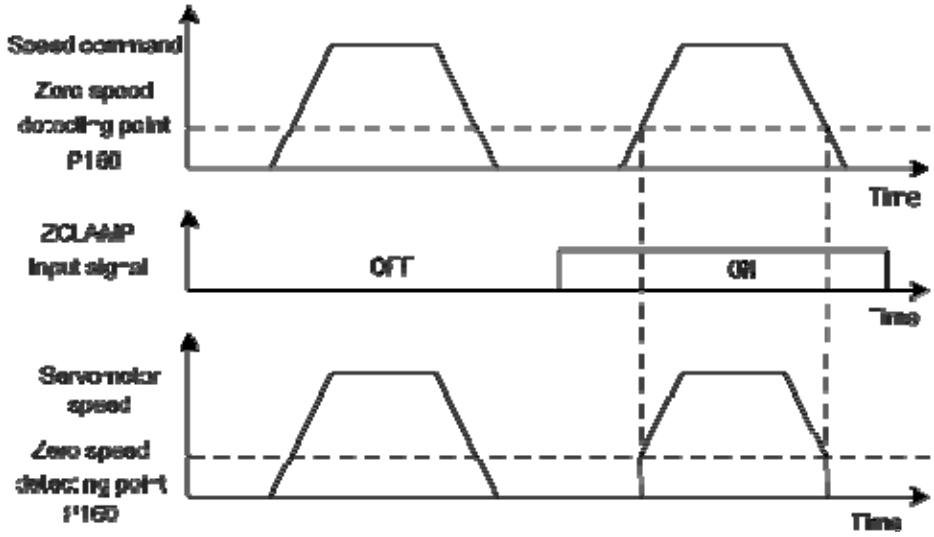

P163	The way of position deviation clearing	Range	Default value	Unit	Usage
		0～1	0		P

- In the position control mode, use the CLR input signal (clear position deviation) from DI to clear the position deviation counter.
- The meaning of this parameter are:(at the time when the position deviation elimination occurs)

  0: The high level of CLR ON.

  1: The rising edge of CLR ON (the moment from OFF to ON).

P165	Range for static check of the servomotor.	Range	Default value	Unit	Usage
		0～1000	5	r/min	ALL

- Use this parameter to check the servomotor to be static. If the speed of the servomotor is lower than the parameter value and will consider the servomotor static.
- Only uses in the timing chart judgment of the electromagnetic brake.

P166	Delay time for electromagnetic brake when servomotor is in standstill	Range	Default value	Unit	Usage
		0～2000	0	ms	ALL

- Use the electromagnetic brake when the SON is from ON go to OFF or alarm occurs in the servo driver. This parameter defines the delay time from the action (the BRK is OFF from DO terminals) of the electromagnetic brake until excitation removal of the servomotor during the servomotor to be in static.
- The parameter should not be smaller than the delay time in which the machinery applies the brake. This parameter will make the brake reliable and then turns off the servomotor excitation to guarantee against the small displacement of the servomotor or depreciation of

the work piece.

- The timing chart refers to 4.13.3 section.

P167	Waiting time for electromagnetic brake when servomotor is in motion	Range	Default value	Unit	Usage
		0～2000	500	ms	ALL

- Use the electromagnetic brake when the SON is from ON go to OFF or alarm occurs in the servo driver. This parameter defines the delay time from excitation removal of the servomotor until the action (the BRK is OFF from DO terminals) of the electromagnetic brake during the servomotor to be in motion.
- This parameter will make the servomotor deceleration from high speed down to low speed and then applies the brake to avoid damaging the brake.
- The actual action time will take the minimum value in both the parameter P167 and the time in which the servomotor decelerates to the P168 value.
- The timing chart refers to 4.13.4 section.

P168	Action speed for electromagnetic brake when servomotor is in motion	Range	Default value	Unit	Usage
		0～3000	100	r/min	ALL

- Refer to the explanation of parameter P167.

P170	Encoder output pulse fraction frequency numerator	Range	Default value	Unit	Usage
		1～31	1		ALL

- Encoder output electronic gear, which is used for fraction frequency of encoder pulse and changing the pulse resolution sent to upper computer.
- Can only do fraction frequency, but not double frequency. And P170≤P171 must be set.
- If P170=1 or P171=1 is set, the fraction frequency electronic gear will be canceled, and AB signal will connect directly.
- It is often used to reduce the pulse frequency and resolution after setting when it is limited that the max frequency of receiving pulse by upper computer.
- If motor encoder adopts Cline encoder, the output encoder number is

$$\frac{P170}{P171} \times C$$

If 2500 line incremental encoder is used, the output encoder number is

$$\frac{P170}{P171} \times 2500$$

If absolute encoder is used, the output encoder number is

$$\frac{P170}{P171} \times P172$$

If resolver is used, the output encoder number is

$$\frac{P170}{P171\times 4}\times(\text{resolution chosen by P089})$$

Take the incremental encoder for example

P170	P171	Output encoder line number
1	1	2500
1	2	1250
3	25	300
2	3	$1666\frac{2}{3}$

- Equivalent encoder line number can be fraction.

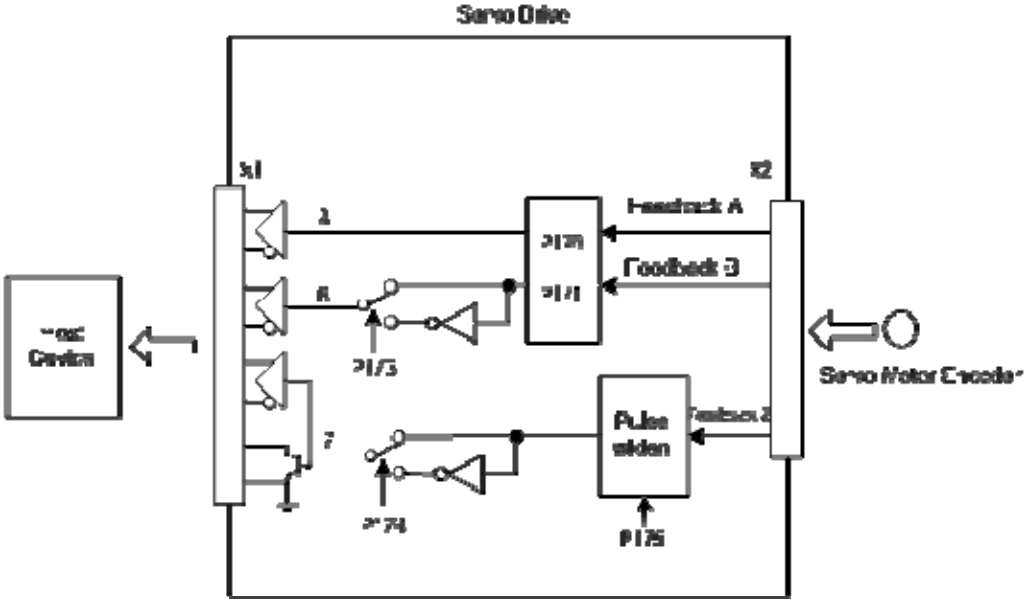

P171	Encoder outputs pulse fraction frequency denominator	Range	Default value	Unit	Usage
		1～31	1		ALL

- Refer to P170

P172	Absolute encoder output lines	Range	Default value	Unit	Usage
		1～16384	2500		ALL

- The meaning of this parameter are
  Set parameter to confirm the output pulse lines from drive when absolute encoder is chose.
- The default value is 2500, which means motor outputs 2500×4＝10000 pulses when motor axis rotates one circle.

P173	Encoder outputs B pulse phase	Range	Default value	Unit	Usage
		0～1	0		ALL

- The meaning of this parameter are
  0: in-phase
  1: anti-phase
- This parameter can adjust the phase relation between B phase signal and A phase signal. That is, when motor CCW, A phase lags B phase 90 degree (P173=0) or A phase advances B phase 90 degree (P173=1); when motor CW, A phase advances B phase 90 degree (P173=0) or A phase lags B phase 90 degree (P173=1).

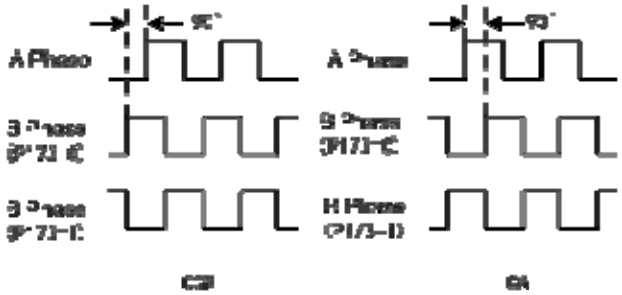

P174	Encoder outputs Z pulse phase	Range	Default value	Unit	Usage
		0～1	0		ALL

- The meaning of this parameter are
  0: in-phase
  1: anti-phase

P175	Encoder outputs Z pulse width	Range	Default value	Unit	Usage
		0～15	0		ALL

- The meaning of this parameter are
  0: Pass-through, which is the original width of encoder Z signal.
  1~15: the width is double width of parameter value multiplying output signal A (or B)
- Broaden Z pulse. When the upper device can not catch narrow Z pulse, it can be widened. But you had better use Z pulse front edge.

P178	Trigger mode of homing	Range	Default value	Unit	Usage
		0～3	0		ALL

- The meanings of this parameter are:
  0：The homing function is closed.
  1：Level triggering by the input GOH of DI
  2：Rising edge triggering by the input GOH of DI

3：Automatic execution after turn on the power supply

- Refer to 4.9 sections for detailed explanation.

P179	Reference mode of homing	Range	Default value	Unit	Usage
		0～5	0		ALL

- After starting the homing, seek the reference point according to the first speed (P183) of homing.
- The meanings of this parameter are:

  0：Looks for REF (rising edge triggering) to make the reference point in CCW direction
  1：Looks for REF (rising edge triggering) to make the reference point in CW direction
  2：Looks for CCWL (falling edge triggering) to make the reference point in CCW direction
  3：Looks for CWL (falling edge triggering) to make the reference point in CW direction
  4：Looks for the Z pulse to make reference point in CCW direction
  5：Looks for the Z pulse to make reference point in CW direction
- If set the CCWL or the CWL as the reference point, neglect the prohibition function when homing execution, but resume the prohibition function after the homing finished.
- Refer to 4.9 sections for detailed explanation.

P180	Origin mode of homing	Range	Default value	Unit	Usage
		0～2	0		ALL

- After arrives the reference point, and then seeks the origin according to the second speed (P184) of homing.
- The meanings of this parameter are:

  0：Looks backward for the Z pulse to be the origin
  1：Looks forward for the Z pulse to be the origin
  2：The rising edge of the reference point takes for the origin directly
- 'Forward' is that the second speed direction is the same with the first speed direction, 'backward' is that the second speed direction reverse with the first speed direction.
- Refer to 4.9 sections for detailed explanation.

P181	misalignment top digit of homing	Range	Default value	Unit	Usage
		-32768～32767	0	10000 pulse	ALL

- The actual origin is equal to that the found origin adds the displacement quantity. The displacement quantity is P181×10000+ P182.

P182	misalignment bottom digit of homing	Range	Default value	Unit	Usage
		-9999～9999	0	pulse	ALL

- Refer to the explanation of parameter P181.

P183	First speed of homing	Range	Default value	Unit	Usage
		1～3000	500	r/min	ALL

- This is the speed for seeking the reference point in homing.

P184	Second speed of homing	Range	Default value	Unit	Usage
		1～3000	50	r/min	ALL

- This is the speed for seeking the origin in homing after the reference point arrived. This speed should be smaller than the first speed (P183).

P185	Acceleration time of homing	Range	Default value	Unit	Usage
		0～30000	0	ms	ALL

- This is the acceleration time from zero to rated speed of the servomotor in homing execution.
- If the command speed is lower than the rated speed, then the desired rising time also correspondingly reduces.
- Use only in the homing execution.

P186	Deceleration time of homing	Range	Default value	Unit	Usage
		0～30000	0	ms	ALL

- This is the deceleration time from rated speed to zero speed of the servomotor in homing execution.
- If the initial command speed is lower than the rated speed, then the desired falling time also correspondingly reduces.
- Use only in the homing execution.

P187	Positioning time delay of homing	Range	Default value	Unit	Usage
		0～3000	50	ms	ALL

- This is the delay time after arrival at the origin. During the time of delay lets the servomotor to stop completely. After the time delay completes, the output HOME from DO becomes ON.

P188	Delay time of complete signal after homing	Range	Default value	Unit	Usage
		1～3000	100	ms	ALL

- This is the effective time for HOME signal after the homing completes. Use in the situation of P178=2 or 3

P189	Command executive mode after homing	Range	Default value	Unit	Usage
		0～1	0		ALL

- The meanings of this parameter are:

  0：After the homing completed, waiting for the HOME signal becomes OFF and then carries out the command again.

  1：After the homing completed carries out the command immediately.

5.4.3 Parameters of section 2

P200	Frequency of first notch filter	Range	Default value	Unit	Usage
		50～1500	1500	Hz	ALL

- Notch filter is the filter for eliminating the specific frequency resonance caused by machinery.
- If the parameter P202 sets zero, then closes the notch filter.

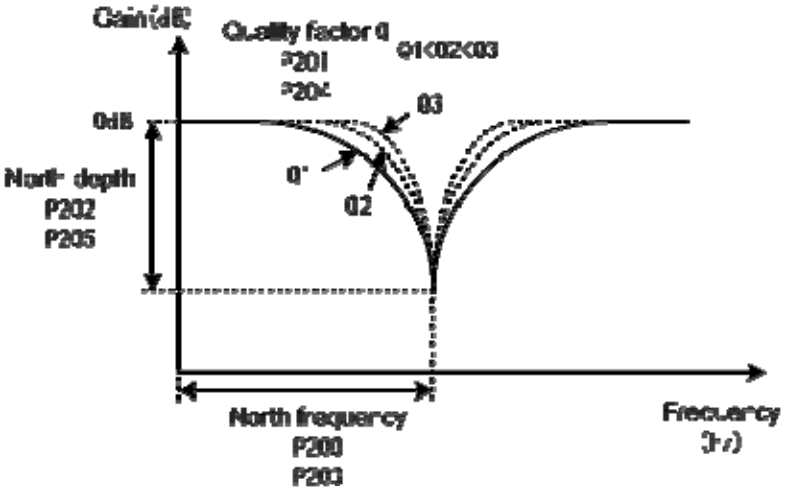

P201	Quality factor of first notch filter	Range	Default value	Unit	Usage
		1～100	7		ALL

- The quality factor Q indicates the shape of notch filter. The bigger the quality factor Q, the more incisive of the north shape and the narrower of bandwidth (-3dB) obtain.

$$\text{Quality factor Q} = \frac{\text{North frequency}}{\text{North Width}}$$

P202	Depth of first notch filter	Range	Default value	Unit	Usage
		0～100	0	%	ALL

- Set the depth of the notch filter. The bigger the value, the more depth of the north obtains, namely the bigger attenuating of filter gain obtains. If the parameter P202 sets zero, then closes the north.
- Using dB unit the north depth D is:

$$D = -20\log(1 - \frac{P202}{100})(dB)$$

P203	Frequency of second notch filter	Range	Default value	Unit	Usage
		50～1500	1500	Hz	ALL

- Notch filter is the filter for eliminating specific frequency resonance caused by mechanical system.
- If the parameter P205 sets zero the north closes.

P204	Quality factor of second notch filter	Range	Default value	Unit	Usage
		1～100	7		ALL

- Refer to the explanation of parameter P201.

P205	Depth of second notch filter	Range	Default value	Unit	Usage
		0～100	0	%	ALL

- Set the depth of the notch filter. If the parameter P205 sets zero the north closes. Refer to the explanation of parameter P201 for others.

P208	Gain switching selection	Range	Default value	Unit	Usage
		0～5	0		ALL

- The meanings of this parameter are:

  0：Fixed first gain group

  1：Fixed second gain group

  2：Input GAIN terminal for gain switching from DI. 'OFF' is the first gain group; 'ON' is the second gain group

  3：The gain group switching depends on the command pulse frequency. If the frequency of input command pulse surpasses the P209, and then switches to the second gain group

  4：The gain group switching depends on the pulse deviation. If the position pulse deviation surpasses the P209, and then switches to the second gain group

  5：The gain group switching depends on the speed of the servomotor. If the speed of the servomotor surpasses the P209, then switches to the second gain group
- Each group of the gain has four parameters and switches at the same time.

First gain group		Second gain group	
Parameter	Name	Parameter	Name
P005	First gain of speed loop	P010	Second gain of speed loop
P006	First integral time constant of speed loop	P011	Second integral time constant of speed loop
P007	First filter time constant of torque	P012	Second filter time constant of torque
P009	First gain of position loop	P013	Second gain of position loop

P209	Level of gain switching	Range	Default value	Unit	Usage
		0～32767	100		ALL

- Set this parameter according to the parameter P208, there are different unit for different switching condition.
- The comparator has hysteretic function set by parameter P210.

P208	Gain switching condition	unit
3	Frequency of command pulse	0.1kHz(kpps)
4	Pulse deviation	pulse
5	Servomotor speed	r/min

P210	Level hysteresis of gain switching	Range	Default value	Unit	Usage
		0～32767	5		ALL

- This parameter has the same unit with P209; refers to the explanation of parameter P209.

P211	Delay time of gain switching	Range	Default value	Unit	Usage
		0～3000	5	ms	ALL

- The switching condition of gain group must maintain a period set by parameter P211.
- During the delay time, if checks the switching condition unsatisfied, then cancels the switching.

P212	Time of gain switching	Range	Default value	Unit	Usage
		0～3000	5	ms	ALL

- During switching of the gain group, the current gain group will make linearity change to the

goal gain group according to the setting time by parameter P212. Each parameter of the gain group also changes at the same time.

- The machinery impact caused by changing the parameter suddenly can avoid.

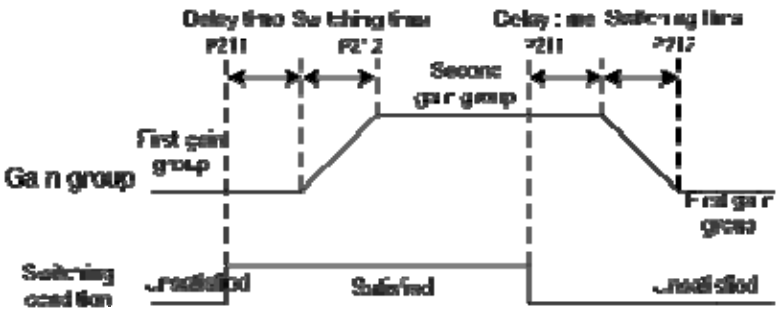

5.4.4 Parameters of section 3

P300	Drive ID number	Range	Default value	Unit	Usage
		1～32	1		M

- Drive ID number is used for setting the parameter of MODBUS communication station number.
- When MODBUS is used to communicate, the communication address of servo drive needs to be set different servo drive station number respectively according to this parameter. The setting range is 1~32. A group of servo drive can only set one station number. It will lead to abnormal communication if it is set station number repeatedly.

P301	MODBUS communication baud rate	Range	Default value	Unit	Usage
		0～6	0		M

- Set MODBUS communication baud rate
- The meanings of this parameter are: (the unit is bit/s)

  0: MODBUS mode prohibition, USB communication enabled

  1：Baud rate is 4800

  2: Baud rate is 9600

  3: Baud rate is 19200

  4: Baud rate is 38400

  5: Baud rate is 57600

  6: Baud rate is 115200

P302	MODBUS communication protocol option	Range	Default value	Unit	Usage
		0～5	4		M

- Choose MODBUS communication protocol through this parameter. It should keep in accordance with that of the upper controller when choose communication protocol. The detailed setting value is as follows. The initial value is 4.
- the meaning of parameter

  0：8，N，1（MODBUS, ASCII）

  1：8，E，1（MODBUS, ASCII）

  2：8，O，1（MODBUS, ASCII）

  3：8，N，1（MODBUS, RTU）

  4：8，E，1（MODBUS, RTU）

  5：8，O，1（MODBUS, RTU）
- Detailed explanation of parameter

  Figure 8 implies the transmissive bits is 8 bits; English letters N、E、O imply parity bit. N

implies not to use this bit; E implies an even bit; O implies an odd bit; Figure 1 implies the ending bit is one.

P305	Motion mode enabled	Range	Default value	Unit	Usage
		0～1	0		M

- This parameter is used for enable motion mode.

The meaning of this parameter:

0: common mode

1: enable motion mode

P309	The default target speed	Range	Default value	Unit	Usage
		0～6000	100	rpm	M

- This parameter is used in motion mode. The current path is position command. But when the target speed is zero, it will go to the setting position automatically with the speed set by this parameter.

P310	Target speed 1	Range	Default value	Unit	Usage
		0～5000	0	rpm	M

- This parameter is valid under motion mode.
- It is the target speed of path under motion mode.

P311	Target speed 2	Range	Default value	Unit	Usage
		0～5000	0	rpm	M

- Target speed 2, refers to the explanation of parameter P310.

P312	Target speed 3	Range	Default value	Unit	Usage
		0～5000	0	rpm	M

- Target speed 3, refers to the explanation of parameter P310.

P313	Target speed 4	Range	Default value	Unit	Usage
		0～5000	0	rpm	M

- Target speed 4, refers to the explanation of parameter P310.

P314	Target speed 5	Range	Default value	Unit	Usage
		0～5000	0	rpm	M

- Target speed 5, refers to the explanation of parameter P310.

P315	Target speed 6	Range	Default value	Unit	Usage
		0～5000	0	rpm	M

- Target speed 6, refers to the explanation of parameter P310.

P316	Target speed 7	Range	Default value	Unit	Usage
		0～5000	0	rpm	M

- Target speed 7, refers to the explanation of parameter P310.

P317	Target speed 8	Range	Default value	Unit	Usage
		0～5000	0	rpm	M

- Target speed 8, refers to the explanation of parameter P310.

P330	Acceleration and deceleration time 1	Range	Default value	Unit	Usage
		30～10000	1000	ms	M

- This parameter is used in motion mode to set the acceleration time of motor from zero-speed to 1000rpm speed.
- If the target speed of current path is less than 1000rpm, the needed acceleration time should be shorter accordingly.
- The acceleration and deceleration time of path in motion mode.

P331	Acceleration and deceleration time 2	Range	Default value	Unit	Usage
		30～10000	1000	ms	M

- Acceleration and deceleration time 2, refers to the explanation of parameter P330.

P332	Acceleration and deceleration time 3	Range	Default value	Unit	Usage
		30～10000	1000	ms	M

- Acceleration and deceleration time 3, refers to the explanation of parameter P330.

P333	Acceleration and deceleration time 4	Range	Default value	Unit	Usage
		30～10000	1000	ms	M

- Acceleration and deceleration time 4, refers to the explanation of parameter P330.

P334	Acceleration and deceleration time 5	Range	Default value	Unit	Usage
		30～10000	1000	ms	M

- Acceleration and deceleration time 5, refers to the explanation of parameter P330.

P335	Acceleration and deceleration time 6	Range	Default value	Unit	Usage
		30～10000	1000	ms	M

- Acceleration and deceleration time 6, refers to the explanation of parameter P330.

P336	Acceleration and deceleration time 7	Range	Default value	Unit	Usage
		30～10000	1000	ms	M

- Acceleration and deceleration time 7, refers to the explanation of parameter P330.

P337	Acceleration and deceleration time 8	Range	Default value	Unit	Usage
		30～10000	1000	ms	M

- Acceleration and deceleration time 8, refers to the explanation of parameter P330.

P350	Delay time 1	Range	Default value	Unit	Usage
		30～10000	1000	ms	M

- This parameter is used in motion mode to set the delay time after path complete.
- When the path is in speed mode, the delay time begins to count from reaching target speed.
- When the path is in position mode, the delay time begins to count from reaching target position.

P351	Delay time 2	Range	Default value	Unit	Usage
		30～10000	1000	ms	M

- delay time 2, refers to the explanation of parameter P350

P352	Delay time 3	Range	Default value	Unit	Usage
		30～10000	1000	ms	M

- delay time 3, refers to the explanation of parameter P350.

P353	Delay time 4	Range	Default value	Unit	Usage
		30～10000	1000	ms	M

- delay time 4, refers to the explanation of parameter P350.

P354	Delay time 5	Range	Default value	Unit	Usage
		30～10000	1000	ms	M

- delay time 5, refers to the explanation of parameter P350.

P355	Delay time 6	Range	Default value	Unit	Usage
		30～10000	1000	ms	M

- delay time 6, refers to the explanation of parameter P350.

P356	Delay time 7	Range	Default value	Unit	Usage
		30～10000	1000	ms	M

- delay time 7, refers to the explanation of parameter P350

P357	Delay time 8	Range	Default value	Unit	Usage
		30～10000	1000	ms	M

- delay time 8, refers to the explanation of parameter P350

5.4.5 Parameters of section 4

P400	Path 1 control word low 16 bits	Range	Default value	Unit	Usage
		-32768～32767	0		M

- This parameter is used in motion mode to set the control word of path.
- The detailed explanation of parameter.

15	14～12	11	10～8	7	6～4	3	2～0
NC	SPD	NC	DEC	NC	ACC	NC	DLY

SPD: Choose 1~8 as the target speed of path to match P310~P317.

DEC: Choose 1~8 as the deceleration time of path to match P330~P337.

ACC: Choose 1~8 as the acceleration time of path to match P330~P337.

DLY: Choose 1~8 as the delay time of path to match P350~P357.

NC: Null

P401	Path 1 control word high 16 bits	Range	Default value	Unit	Usage
		-32768～32767	0		M

- This parameter is used in motion mode to set the control word of path.
- The detailed explanation of parameter.

15	14～10	9～5	4～3	1	0
TYPE	NC	NPRC	CMD	NEXT	INS

TYPE: 0: this path is speed command.
1: this path is position command

NPRC: Choose next path when it sets to execute automatically (NEXT=1). It is represented in binary system. 1~8 match path 1to path 8 respectively.

CMD: 0: absolute position location command (regarding the position after origin regression as origin)
1: incremental location command, increases basing on the end position of the last section. When the last section is speed command, motor will decelerate and stop at the current position.
2: relative location command, increases at the current position.
3: no meaning
CMD content is invalid under the speed instruction.

NEXT: 0: When this path is finished, wait the command from the next section path.
1: When this path is finished and the delay time reaches, it will load the next section path automatically and be triggered by the next CTPG signal.

INS: 0: while this path is executed, it is not allowed to be interrupted by the next section path.
1: while this path is executed, it is allowed to be interrupted by the next section path.

NC: null

P402	Path 2 control word low 16 bits	Range	Default value	Unit	Usage
		-32768～32767	0		M

- Path 2 control word low 16 bits, refers to parameter P400 for explanation.

P403	Path 2 control word high 16 bits	Range	Default value	Unit	Usage
		-32768～32767	0		M

- Path 2 control word high 16 bits, refers to parameter P401 for explanation.

P404	Path 3 control word low 16 bits	Range	Default value	Unit	Usage
		-32768～32767	0		M

- Path 3 control word low 16 bits, refers to parameter P400 for explanation.

P405	Path 3 control word high 16 bits	Range	Default value	Unit	Usage
		-32768～32767	0		M

- Path 3 control word high 16 bits, refers to parameter P401 for explanation.

P406	Path 4 control word low 16 bits	Range	Default value	Unit	Usage
		-32768～32767	0		M

- Path 4 control word low 16 bits, refers to parameter P400 for explanation.

P407	Path 4 control word low 16 bits	Range	Default value	Unit	Usage
		-32768～32767	0		M

- Path 4 control word high 16 bits, refers to parameter P401 for explanation.

P408	Path 5 control word low 16 bits	Range	Default value	Unit	Usage
		-32768～32767	0		M

- Path 5 control word low 16 bits, refers to parameter P400 for explanation.

P409	Path 5 control word high 16 bits	Range	Default value	Unit	Usage
		-32768～32767	0		M

- Path 5 control word high 16 bits, refers to parameter P401 for explanation.

P410	Path 6 control word low 16 bits	Range	Default value	Unit	Usage
		-32768～32767	0		M

- Path 6 control word low 16 bits, refers to parameter P400 for explanation.

P411	Path 6 control word high 16 bits	Range	Default value	Unit	Usage
		-32768～32767	0		M

- Path 6 control word high 16 bits, refers to parameter P401 for explanation.

P412	Path 7 control word low 16 bits	Range	Default value	Unit	Usage
		-32768～32767	0		M

- Path 7 control word low 16 bits, refers to parameter P400 for explanation.

P413	Path 7 control word high 16 bits	Range	Default value	Unit	Usage
		-32768～32767	0		M

- Path 7 control word high 16 bits, refers to parameter P401 for explanation.

P414	Path 8 control word low 16 bits	Range	Default value	Unit	Usage
		-32768～32767	0		M

- Path 8 control word low 16 bits, refers to parameter P400 for explanation.

P415	Path 8 control word high 16 bits	Range	Default value	Unit	Usage
		-32768～32767	0		M

- Path 8 control word high 16 bits, refers to parameter P401 for explanation.

5.4.6 Parameters of section 5

P500	Path 1 data low 16 bits	Range	Default value	Unit	Usage
		-32768～32767	0	PUU	M

- This parameter is used in motion mode. When path TYPE is one and position command is chose, this parameter means the low 16 bits of target position
- Cooperate with the high 16 bits of path data to form the target position of 32 digit. The unit is PUU, which is equal to the resolution of encoder.
- The target position is confirmed related to the position after origin regression. Regard the position after origin regression as origin

P501	Path 1 data high 16 bits	Range	Default value	Unit	Usage
		-32768～32767	0	PUU	M

- This parameter is used in motion mode. When the path TYRE is 1 and position command is chose, this parameter means the high 16 bits of target position.
- Cooperate with the low 16 bits of path data to form the target position of 32 bits. The unit is PUU, which is equal to the resolution of encoder.

P502	Path 2 data low 16 bits	Range	Default value	Unit	Usage
		-32768～32767	0	PUU	M

- Path 2 data low 16 bits, refers to parameter P500 for explanation.

P503	Path 2 data high 16 bits	Range	Default value	Unit	Usage
		-32768～32767	0	PUU	M

- Path 2 data high 16 bits, refers to parameter P501 for explanation.

P504	Path 3 data low 16 bits	Range	Default value	Unit	Usage
		-32768～32767	0	PUU	M

- Path 3 data low 16 bits, refers to parameter P500 for explanation.

P505	Path 3 data high 16 bits	Range	Default value	Unit	Usage
		-32768～32767	0	PUU	M

- Path 3 data high 16 bits, refers to parameter P501 for explanation.

P506	Path 4 data low 16 bits	Range	Default value	Unit	Usage
		-32768～32767	0	PUU	M

- Path 4 data low 16 bits, refers to parameter P500 for explanation.

P507	Path 4 data high 16 bits	Range	Default value	Unit	Usage
		-32768～32767	0	PUU	M

- Path 4 data high 16 bits, refers to parameter P501 for explanation.

P508	Path 5 data low 16 bits	Range	Default value	Unit	Usage
		-32768～32767	0	PUU	M

- Path 5 data low 16 bits, refers to parameter P500 for explanation.

P509	Path 5 data high 16 bits	Range	Default value	Unit	Usage
		-32768～32767	0	PUU	M

- Path 5 data high 16 bits, refers to parameter P501 for explanation.

P510	Path 6 data low 16 bits	Range	Default value	Unit	Usage
		-32768～32767	0	PUU	M

- Path 6 data low 16 bits, refers to parameter P500 for explanation.

P511	Path 6 data high 16 bits	Range	Default value	Unit	Usage
		-32768～32767	0	PUU	M

- Path 6 data high 16 bits, refers to parameter P501 for explanation.

P512	Path 7 data low 16 bits	Range	Default value	Unit	Usage
		-32768～32767	0	PUU	M

- Path 7 data low 16 bits, refers to parameter P500 for explanation.

P513	Path 7 data high 16 bits	Range	Default value	Unit	Usage
		-32768～32767	0	PUU	M

- Path 7 data high 16 bits, refers to parameter P501 for explanation.

P514	Path 8 data low 16 bits	Range	Default value	Unit	Usage
		-32768～32767	0	PUU	M

- Path 8 data low 16 bits, refers to parameter P500 for explanation.

P515	Path 8 data high 16 bits	Range	Default value	Unit	Usage
		-32768～32767	0	PUU	M

- Path 8 data high 16 bits, refers to parameter P501 for explanation.

5.5 DI function description in detail

<table>
<tr><th>Ordinal</th><th>Symbol</th><th>Function</th><th>Function explanation</th></tr>
<tr><td>0</td><td>NULL</td><td>Not have function</td><td>The input condition does not have any influence to the system.</td></tr>
<tr><td>1</td><td>SON</td><td>Servo enable</td><td>OFF：servo driver does not enable, servomotor does not excite;
ON ：servo driver has enabled, servomotor has excited.</td></tr>
<tr><td>2</td><td>ARST</td><td>Clear alarm</td><td>When an alarm occurs and the alarm has permission to clear, then the rising edge (from OFF becomes ON) of input signal ARST will clear the alarm. Attention: only a part of alarm can have the permission to clear.</td></tr>
<tr><td>3</td><td>CCWL</td><td>CCW drive inhibition</td><td>OFF：Inhibit CCW running;
ON ：Enable CCW running.
Uses this function for protection of the mechanical traveling limit, the function is controlled by the parameter P097. Pays attention to that the P097 default value neglects this function, therefore needs to modify P097 if needs to use this function:
<table>
<tr><th>P097</th><th>Explanation</th></tr>
<tr><td>0</td><td rowspan="2">Use CCW prohibition function and must connect the normally closed contact of the limit switch.</td></tr>
<tr><td>2</td></tr>
<tr><td>1</td><td rowspan="2">Neglect CCW prohibition function, this signal does not have any influence to CCW movement of the servomotor, and therefore does not need the CCWL wiring.</td></tr>
<tr><td>3(Default)</td></tr>
</table></td></tr>
</table>

<table>
<tr><th>Ordinal</th><th>Symbol</th><th>Function</th><th>Function explanation</th></tr>
<tr><td>4</td><td>CWL</td><td>CW drive inhibition</td><td>OFF：Inhibit CW running;
ON ：Enable CW running.
Uses this function for protection of the mechanical traveling limit, the function is controlled by the parameter P097. Pays attention to that the P097 default value neglects this function, therefore needs to modify P097 if needs to use this function:
<table>
<tr><th>P097</th><th>Explanation</th></tr>
<tr><td>0</td><td rowspan="2">Use CW prohibition function and must connect the normally closed contact of the limit switch.</td></tr>
<tr><td>1</td></tr>
<tr><td>2</td><td rowspan="2">Neglect CW prohibition function, this signal does not have any influence to CW movement of the servomotor, and therefore does not need the CWL wiring.</td></tr>
<tr><td>3(default)</td></tr>
</table></td></tr>
<tr><td>5</td><td>TCCW</td><td>CCW torque limitation</td><td>OFF：Torque is not limited by parameter P067 in CCW direction;
ON ：Torque is limited by parameter P067 in CCW direction.
Attention: whether the TCCW is effective or not, the torque is also limited by the parameter P065 in CCW direction.</td></tr>
<tr><td>6</td><td>TCW</td><td>CW torque limitation</td><td>OFF：Torque is not limited by parameter P068 in CW direction;
ON ：Torque is limited by parameter P068 in CW direction.
Attention: whether the TCW is effective or not, the torque is also limited by the parameter P066 in CW direction.</td></tr>
<tr><td>7</td><td>ZCLAMP</td><td>Zero speed clamp</td><td>When the following condition satisfies, the function of zero speed clamp starts working:
Condition 1：speed control mode;
Condition 2：ZCLAMP is ON;
Condition 3：Speed command is lower than parameter P160.
If any condition mentioned above does not satisfy, carries out the normal speed control. For concrete application refers to the explanation of parameter P162.</td></tr>
</table>

<table>
<tr><th>Ordinal</th><th>Symbol</th><th>Function</th><th>Function explanation</th></tr>
<tr><td>8</td><td>CZERO</td><td>Zero command</td><td>Under the speed or torque control mode, the speed or torque command is:
OFF：Normal command;
ON ：Zero command.</td></tr>
<tr><td>9</td><td>CINV</td><td>Command reverse</td><td>Under the speed or torque control mode, the speed or torque command is:
OFF：Normal command;
ON ：Reverse command.</td></tr>
<tr><td>10</td><td>SP1</td><td>Internal speed selection 1</td><td rowspan="3">In speed control mode and speed limitation, Chooses internal speed by the combination from SP1, SP2 and SP3 1~8:
<table>
<tr><th colspan="3">DI Signals[note]</th><th rowspan="2">Speed command</th></tr>
<tr><th>SP3</th><th>SP2</th><th>SP1</th></tr>
<tr><td>0</td><td>0</td><td>0</td><td>Internal speed 1 (parameter P137)</td></tr>
<tr><td>0</td><td>0</td><td>1</td><td>Internal speed 2 (parameter P138)</td></tr>
<tr><td>0</td><td>1</td><td>0</td><td>Internal speed 3 (parameter P139)</td></tr>
<tr><td>0</td><td>1</td><td>1</td><td>Internal speed 4 (parameter P140)</td></tr>
<tr><td>1</td><td>0</td><td>0</td><td>Internal speed 5 (parameter P141)</td></tr>
<tr><td>1</td><td>0</td><td>1</td><td>Internal speed 6 (parameter P142)</td></tr>
<tr><td>1</td><td>1</td><td>0</td><td>Internal speed 7 (parameter P143)</td></tr>
<tr><td>1</td><td>1</td><td>1</td><td>Internal speed 8 (parameter P144)</td></tr>
</table>
Note: 0 indicates OFF; 1 indicates ON.</td></tr>
<tr><td>11</td><td>SP2</td><td>Internal speed selection 2</td></tr>
<tr><td>12</td><td>SP3</td><td>Internal speed selection 3</td></tr>
<tr><td>13</td><td>TRQ1</td><td>Internal torque selection 1</td><td>In torque control mode and torque limitation, Chooses internal torque by the combination from TRQ1 and TRQ2 1~4:</td></tr>
</table>

<table>
<tr><th>Ordinal</th><th>Symbol</th><th>Function</th><th>Function explanation</th></tr>
<tr><td>14</td><td>TRQ2</td><td>Internal torque selection 2</td><td>
<table>
<tr><th colspan="2">DI Signals[note]</th><th rowspan="2">Torque command</th></tr>
<tr><th>TRQ2</th><th>TRQ1</th></tr>
<tr><td>0</td><td>0</td><td>Internal torque 1 (parameterP145)</td></tr>
<tr><td>0</td><td>1</td><td>Internal torque 2 (parameterP146)</td></tr>
<tr><td>1</td><td>0</td><td>Internal torque 3 (parameterP147)</td></tr>
<tr><td>1</td><td>1</td><td>Internal torque 4 (parameterP148)</td></tr>
</table>
Note: 0 indicates OFF; 1 indicates ON.
</td></tr>
<tr><td>15</td><td>EMG</td><td>Emergency stop</td><td>OFF：Permits the servo driver to work;
ON ：Servo driver stops; removes the main current and the excitation of servomotor.</td></tr>
<tr><td>16</td><td>CMODE</td><td>Control mode switching</td><td>Set parameter P004 3,4 or 5 can carry out the control mode switching:
<table>
<tr><th>P004</th><th>CMODE</th><th>Control mode</th></tr>
<tr><td rowspan="2">3</td><td>0</td><td>position</td></tr>
<tr><td>1</td><td>speed</td></tr>
<tr><td rowspan="2">4</td><td>0</td><td>position</td></tr>
<tr><td>1</td><td>torque</td></tr>
<tr><td rowspan="2">5</td><td>0</td><td>speed</td></tr>
<tr><td>1</td><td>torque</td></tr>
</table>
Note: 0 indicates OFF; 1 indicates ON.</td></tr>
<tr><td>17</td><td>GAIN</td><td>Gain switching</td><td>If parameter P208=2， can carry out gain group switching by GAIN input:
OFF：First gain group;
ON ：Second gain group.</td></tr>
<tr><td>18</td><td>GEAR1</td><td>Electronic gear switching 1</td><td>Select electronic gear for command pulse by the combination of GEAR1 and GEAR2 1~4:
<table>
<tr><th>GEAR2</th><th>GEAR</th><th>Numerator of electronic</th></tr>
</table></td></tr>
</table>

<table>
<tr><th>Ordinal</th><th>Symbol</th><th>Function</th><th>Function explanation</th></tr>
<tr><td>19</td><td>GEAR2</td><td>Electronic gear switching 2</td><td>
<table>
<tr><td></td><td>1</td><td>gear N</td></tr>
<tr><td>0</td><td>0</td><td>1st numerator(parameterP029)</td></tr>
<tr><td>0</td><td>1</td><td>2nd numerator(parameterP031)</td></tr>
<tr><td>1</td><td>0</td><td>3rd numerator(parameterP032)</td></tr>
<tr><td>1</td><td>1</td><td>4th numerator(parameterP033)</td></tr>
</table>
Note: 0 indicates OFF; 1 indicates ON.</td></tr>
<tr><td>20</td><td>CLR</td><td>Clear position deviation</td><td>Eliminates the position deviation counter; The elimination mode is selected by the parameter P163; The elimination of position deviation occurs in the moment:
P163=0：CLR ON Level:
P163=1：CLR Rising edge (from OFF become ON).</td></tr>
<tr><td>21</td><td>INH</td><td>Pulse input inhibition</td><td>OFF：Permits position command pulse to go through:
ON ：Position command pulse is inhibited.</td></tr>
<tr><td>22</td><td>PC</td><td>Proportional control</td><td>OFF： PI control of speed loop:
ON ： P control of speed loop.</td></tr>
<tr><td>23</td><td>GOH</td><td>Homing triggering</td><td>Starts homing function; Refers to the explanation of parameter P178 and 4.9 sections.</td></tr>
<tr><td>24</td><td>REF</td><td>Reference point of homing</td><td>He homing returns to an external reference point; Refers to the explanation of parameter P179 and 4.9 sections.</td></tr>
<tr><td>25</td><td>SEN</td><td>Request absolute position</td><td>Upper computer requesting absolute position information and triggering rising edge, refers to chapter 4.10</td></tr>
<tr><td>26</td><td>MMODE</td><td>motion mode trigger</td><td>OFF: normal mode
ON: motion mode</td></tr>
</table>

Ordinal	Symbol	Function	Function explanation
27	CTRG	Motion command trigger	Trigger motion command. The rising edge is valid. Refer to chapter 4.10
28	MDATA1	Motion command choice 1	Choosing motion mode path, refers to chapter 4.5.4
29	MDATA2	Motion command choice 2	
30	MDATA3	Motion command choice 3	

5.6 DO function description in detail

Ordinal	Symbol	Function	Function explanation
0	OFF	Always invalid	Forced output OFF.
1	ON	Always valid	Forced output ON.
2	RDY	Servo ready	OFF：Servo main power supply is off; Or alarm occurs; ON ：Servo main power supply is normal， no alarm occurs.
3	ALM	Alarm	OFF：Alarm occurs; ON ：No alarm occurs.
4	ZSP	Zero speed	OFF：Servomotor speed is higher than parameter P160 (in CCW or CW); ON ：Servomotor speed is lower than parameter P160 ((in CCW or CW).
5	COIN	Positioning complete	In position control mode OFF：Position deviation is bigger than parameter P150; ON ：Position deviation is smaller than parameter P150.
6	ASP	Arrival speed	OFF：Servomotor speed is lower than parameter P154; ON ：Servomotor speed is higher than parameter P154. Can set polarity function， refers to the explanation of parameter P154.
7	ATRQ	Arrival torque	OFF：Servomotor torque is lower than parameter P157; ON ：Servomotor torque is higher than parameter P157. Can set polarity function， refers to the explanation of parameter P157.
8	BRK	Electromagnetic brake	OFF：Electromagnetic brake applies the brake; ON ：Electromagnetic brake releases the brake.
9	RUN	Servo is in motion	OFF：Servomotor has not excited; ON ：Servomotor has excited in motion.
10	NEAR	Near positioning	In position control mode OFF：Position deviation is bigger than parameter P152; ON ：Position deviation is smaller than parameter P152.

Ordinal	Symbol	Function	Function explanation
11	TRQL	Torque under limitation	OFF：Servomotor torque has not reached the limit value; ON ：Servomotor torque has reached the limit value. Torque limitation is set by parameter P064.
12	SPL	Speed under limitation	In torque control mode OFF：Servomotor speed has not reached the limit value; ON ：Servomotor speed has reached the limit value. Speed limitation is set by parameter P077.
13	HOME	Homing complete	After homing has completed， the HOME output is ON. The timing chart refers to 4.9 sections.
14	MDONE	Motion path completed	under Motion mode OFF: The current path has not completed, or the preset time has not arrived. ON: Current path has completed, and the preset time has arrived.

Chapter 6 Communication functions

6.1 Communication hardware interface

Servo drive

It has RS-485 serial communication functions, which could achieve functions of driving servo system, altering parameters and monitoring servo system state through MODBUS agreement.

It has USB communication function, which need to use with PC terminal software. It can do the performance of changing parameters. Please refer the detailed information to PC terminal software use instructions and other related documents.

6.2 Communication parameter

P300	Drive ID number	range	default value	Unit	Usage
		1～32	1		M

When RS-485 communication is used, the communication address of servo drive needs to set by this parameter respectively as different servo drive station number. The setting range of station number address is 1~ 32 and the default value is one. This station number represents the absolute address in the communication network of this drive. A group of servo drive can only set one station number. It will lead to abnormal communication if set repeatedly.

P301	MODBUS communication baud rate	range	default value	Unit	Usage
		0～6	0		M

Choose USB communication interface or RS-485 communication baud rate through this parameter. When the value is 0, choose USB communication interface; when the value is 1~6, choose RS-485 communication interface. Different value is corresponding to different baud rate. The chosen communication baud rate needs to keep in correspondence with the communication baud rate of upper controller. The detailed setting is as follows:

The meaning of parameter

0: Using USB interface to communicate, it needs to use with PC terminal software.

1: Using RS-485 interface to communicate, the baud rate is 4800.

2: Using RS-485 interface to communicate, the baud rate is 9600

3: Using RS-485 interface to communicate, the baud rate is 19200

4: Using RS-485 interface to communicate, the baud rate is 38400

5: Using RS-485 interface to communicate, the baud rate is 57300

6: Using RS-485 interface to communicate, the baud rate is 115200.

P302	MODBUS communication protocol option	Range	default value	Unit	Usage
		0～5	4		M

Choose RS-485 communication protocol through this parameter. The chosen communication protocol needs to keep in correspondence with the communication protocol of upper controller.

The detailed setting is as follows:

The meaning of parameter:

0：8，N，1（MODBUS, ASCII）
1：8，E，1（MODBUS, ASCII）
2：8，O，1（MODBUS, ASCII）
3：8，N，1（MODBUS, RTU）
4：8，E，1（MODBUS, RTU）
5：8，O，1（MODBUS, RTU）

Figure 8 indicates the transmissive data is eight bits. English letter N, E, O represent parity bit: N represents not to use this, E represents one even bit, zero represents one odd bit. Figure 1 means the end bit is 1.

6.3 MODBUS communication protocol

When RS-485 serial communication is used, every servo drive should be set its servo drive station by P300 parameter in advance. Computer or upper controller implements control for servo drive according to the station number. The baudrate needs to refer to the communication parameter of upper controller to set parameter P301, in which MODBUS can use the following two modes: ASCII（American Standard Code for information interchange）mode or RTU（Remote Terminal Unit）mode. The user can set the needed communication protocol in the parameter P320. There is explanation for MODBUS communication as follows:

The encoding meaning

ASCII mode:

Every 8 bits data consists of two ASCII character. For example: one 1byte data 64H (hexadecimal notation), presented by ASCII “64”, contains ‘6’ASCII code (36H) and ‘4’ ASCII code (34H).

The ASCII code of figure 0 to 9 and letter A to F, is in the following chart.

Character sign	‘0’	‘1’	‘2’	‘3’	‘4’	‘5’	‘6’	‘7’
Corresponding ASCII code	30H	31H	32H	33H	34H	35H	36H	37H
Character sign	‘8’	‘9’	‘A’	‘B’	‘C’	‘D’	‘E’	‘F’
Corresponding ASCII code	38H	39H	41H	42H	43H	44H	45H	46H

RTU mode:

Every 8bits data consists of two 4bits hexadecimal characters. For example: one 1byte data is 64H.

Character structure：

10bits character frame (used for 8bits character without verification)

8, N, 1

11bits character frame (used for 8bits character with verification)

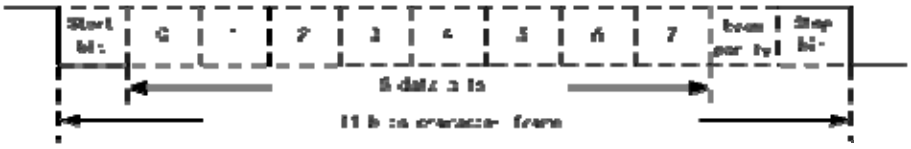

8, E, 1

8，O，1

Communication data structure：

ASCII mode：

STX	Start character ‘：’(3AH)
ADR	Communication address: 1byte contains two ASCII codes
CMD	Command code: 1byte contains two ASCII codes
DATA(n-1)	Data content: Nword=2Nbyte, contains 4N ASCII codes, N<=100
……..	
DATA(0)	
LRC	Verification code: 1byte contains two ASCII codes
End1	End code 1: (0DH)(CR)
End0	End code 0: (0AH)(LF)

- PTU mode：

STX	the minimum time interval with upper frame is 3.5 character time
ADR	Communication address : 1byte
CMD	Command code : 1byte
DATA(n-1)	Data content: Nword=2Nbyte，N<=100
……..	
DATA(0)	
CRC	Verification code: 2byte
End1	the minimum time interval with below frame is 3.5 character time

- The explanations of all the items of communication data format frame are as follows.

STX (communication starting)

ASCII mode: ‘:’character.

RTU mode: the minimum time interval with upper frame is 3.5 character time

ADR (communication address)

Legal communication address ranges from 1 to 32, as the follow picture: communication with the servo drive of station number 16 (hexadecimal 10H) .

ASCII mode: ADR=‘1’，‘0’ => ‘1’=31H，‘0’=30H

RTU mode: ADR = 10H

CMD (command code) and DATA (data character)

The format of data character is according to command code. The common command codes are described as follows:

Command code 03H, could read N words (16bit). The maximum of N is 100. For example, read two parameters continuously from section 0 number 5 parameter of 01H station number servo drive.

ASCII mode:

command information：

STX	‘：’
ADR	‘0’
	‘1’
CMD	‘0’
	‘3’
Initial data position	‘0’
	‘0’
	‘0’
	‘5’
Data number	‘0’
	‘0’
	‘0’
	‘2’
LRC Check	‘F’
	‘5’
End1	‘0DH’(CR)
End0	‘0AH’(LF)

Respond information：

STX	‘：’
ADR	‘0’
	‘1’
CMD	‘0’
	‘3’
Data number(count by byte)	‘0’
	‘4’
Section 0 number 5 parameter content	‘0’
	‘0’
	‘2’
	‘8’
Section 0 number 6 parameter content	‘0’
	‘0’
	‘C’
	‘8’
LRC Check	‘D’
	‘A’
End1	‘0DH’(CR)
End0	‘0AH’(LF)

RTU mode：

command information：

ADR	01H
CMD	03H
Initial data position	00H (high byte)
	05H (low byte)
Data number	00H (high byte)
	02H (low byte)
CRC Low	D4H (high byte)
CRC High	OAH (low byte)

Respond information：

ADR	01H
CMD	03H
Data number(count by byte)	04H
0 section number 5 parameter content	00H (high byte)
	278H (low byte)
0 section number 6 parameter content	00H (high byte)
	C8H (low byte)
CRC Low	7BH (high byte)
CRC High	ADH (low byte)

Command code 06H, could write in one parameter. The maximum of N is 100. For example, write 100 (0064H) to the section 0 number 05 parameter of 01H station number servo drive.

ASCII mode:

command information：

STX	‘ : ’
ADR	‘0’
	‘1’
CMD	‘0’
	‘6’
Initial data position	‘0’
	‘0’
	‘0’
	‘5’
Data content	‘0’
	‘0’
	‘6’
	‘4’
LRC Check	‘E’
	‘A’
End1	‘0DH’(CR)
End0	‘0AH’(LF)

Respond information：

STX	‘ : ’
ADR	‘0’
	‘1’
CMD	‘0’
	‘6’
Initial data position	‘0’
	‘0’
	‘0’
	‘5’
Data content	‘0’
	‘0’
	‘6’
	‘4’
LRC Check	‘E’
	‘A’
End1	‘0DH’(CR)
End0	‘0AH’(LF)

RTU mode: ：

command information：

ADR	01H
CMD	06H
Initial data position	00H (high byte)
	05H (low byte)
Data content	00H (high byte)
	64H (low byte)
CRC Low	98H (high byte)
CRC High	20H (low byte)

Respond information：

ADR	01H
CMD	06H
initial data address	00H (high byte)
	05H (low byte)
Data content	00H (high byte)
	64H (low byte)
CRC Low	98H (high byte)
CRC High	20H (low byte)

Every operational parameter is only limited to the same parameter section. Different parameter section needs to be operated respectively.

Frame check calculate of LRC (ASCII mode) and CRC(RTU mode):

LRC frame check:

ASCII mode adopts LRC (Longitudinal Redundancy Check)frame check.LRC calculation adds all the 8bit character from ADR to the last data content in the message, neglects carry and then determines its two's complement.(For example, if the result after adding is 128H in hexadecimal , then take 28H). Then calculate its two's complement. The counting result is LRC frame check.

For example, read the section 0 No. 05 parameter of station number 01H servo drive.

STX	‘:’
ADR	‘0’
	‘1’
CMD	‘0’
	‘3’
Initial data position	‘0’
	‘0’
	‘0’
	‘5’
Data number	‘0’
	‘0’
	‘0’
	‘2’
LRC Check	‘F’
	‘5’
End1	‘0DH’(CR)
End0	‘0AH’(LF)

LRC calculate process is as follows:

01H+03H+00H+05H+00H+02H=0BH,

Taking two's complement of OBH is F5H. so LRC is ‘F’, ‘5’.

PTU mode:

PTU mode adopts CRC (Cyclical Redundancy Check) frame check. The following steps are explaining CRC frame check calculation:

Step 1: Initialize one 16 bits register with content of FFFFH which is called CRC register.

Step 2: Work the first byte of command information and the low byte of 16-bits CRC register, and store the result back to CRC register.

Step 3: Check the lowest bit (LSB) of CRC register. If this bit is 0, then move right for one bit; if this bit is one, the CRC register value moves right for one bit and then work the XOR (exclusive or operation) with A001H.

Step 4: Go back to step 3 until the step 3 has been executed for eight times, then go to step 5.

Step 5: Repeats step 2 to step 4 for the next byte of command information, until all the types have completed the above processing. And the content of CRC register is CRC frame check.

Explanation: after working out the CRC frame check, in the command information, it needs to fill the CRC low bit firstly and then fill the CRC high bit. Please refer to the following

example.

For example, read the section 0 No.05 parameter of station No. 01H servo drive. If the last content of CRC register is 3794H counting from ADR to the last byte of data, the command information is as follows. It needs to note that byte 94H should be sent before byte 37H.

ADR	01H
CMD	03H
Initial data position	00H(hign byte)
	05H(low byte)
Data number	00H(hign byte)
	02H(low byte)
CRC Low	D4H(hign byte)
CRC High	OAH(low byte)

End 1, end 0 communication end:

ASCII mode: It indicates end communication with ODH which is character‘\r’and 0AH which is character‘\n’.

RTU mode: The minimum time interval with below frame is 3.5 character time.

6.4 Write in and read out parameters

Please refer the details of the entire servo drive parameter to parameter chapter. The parameter is divided by the parameter section. Every parameter is represented by 16bit data. The communication address of every parameter is confirmed commonly by parameter section number and parameter sequence number in the section. The address is 16bits. The parameter section number is high 8bits of the address. The sequence number in parameter section is low 8bits of the address. For example, the communication address of parameter P322 is 3×256+22=790.Other parameters may be done by analogy.

The parameter format explanation written in and read out through communication (Reading state quantity refers to chapter 6.6): the parameter written in and read out must be the decimal integer. The parameters with decimal point on the drive display panel and in the manuals are all magnified for corresponding times in the process of writing in and reading out in order to make it to be the decimal integer. The display format is binary parameter. But it adopts equivalent integer of decimalism in the process of writing in and reading out, with the details as follows. The operation example refers to the instruction of chapter 6.7. The mapping mode of all parameter refers to the instruction of parameter chapter.

Parameter sequence number	The displaying value of use manuals	Communication operating value	Mapping mode
P005	40	40	invariant
P006	20.0	200	Magnify for ten times
P007	1.00	100	Magnify for 100 times
P120	00000(binary system)	0 (decimalism)	Binary system turns to decimalism

All the parameter in the parameter instruction can be written in and read out through communication. The details refer to the parameter instruction in chapter five.

6.5 Common operation command

The internal parameter of servo drive can be read and written through RS-485 communication interface. After reading and writing were completed, it can do entire operation to drive parameter list through specific command code.

Firstly, write the operation code to operation command code register. After a certain delay time, read the operation state register and read out the specific value which means the operation is completed successfully. The operation address is shown as follows:

Register Operation Explanation	Contact address	Data size
Operate command code register	0x1100	16bit
Operate state register	0x1101	16bit

The command codes supported by the current edition include “parameter operation is valid”, “parameter write in EEPROM”, “recover default value”. The detailed explanation of all command codes is as follows:

Command code explanation	Command code	Completion state	Operation meaning
parameter operation is valid	0xBB00	0x44FF	To make the modified parameters in parameter list valid
Write parameter in EEPROM	0x0011	0xFFEE	To write the parameters in parameter list to EEPROM
Recover default value	0x0024	0xFFDB	To read the default value of all the parameter to parameter list

6.6 Quantity of state surveillance

The internal quantity of state of servo drive can be read out through RS-485 communication interface, but can not be written in. The quantity of state is stored by 16bits data. For the data whose value is accurate to decimal place, its value will be magnified by 10 times or 100 times when it is read out by communication interface. Such case is same as the reading part of parameter. The operation example refers to the instruction of chapter 6.7. The organization order of relative quantity of state is as follows:

0x1000： Motor speed, unit “r/min”；
0x1001：Original position command (input pulse) low 16 bit;
0x1002： Original position command (input pulse) high 16 bit;
0x1003：Position command (input pulse) low 16 bit;
0x1004：Position command (input pulse) high 16 bit;
0x1005：Current position (input pulse) low 16 bit;
0x1006：Current command (input pulse) high 16 bit;
0x1007：Positional deviation (input pulse) low 16 bit;
0x1008：Positional deviation (input pulse) high 16 bit;
0x1009：Motor torque, unit “%”;
0x100A：Peak torque, unit “%”;
0x100B：Motor current, unit “A”;
0x100C：Peak current, unit “A”;
0x100D：Position command pulse frequency, unit “KHz”;
0x100E：Speed command, unit“r/min”;
0x100F：Torque command, unit “%”;
0x1010：Speed analog command voltage, unit “mV”;
0x1011：Torque analog command voltage, unit “mV”;
0x1012：Input terminal DI state, note 1;
0x1013：Output terminal DO state, note 2;
0x1014：Rotor absolute position (pulse) low 16 bit;
0x1015：Rotor absolute position (pulse) high 16 bit;
0x1016：Accumulative load rate, unit “%”;
0x1017：Regenerative brake load rate, unit “%”;
0x1018：Alarm code;
0x101A：Busbar voltage, unit “V”;
0x101B：Module internal temperature, unit “℃”;
0x101C：Multi-turn position (when there is no multi-turn information, read out value 0).

Note 1: The data read by this address is 16bit, of which bit4~bit0 mean the input state of DI5~DI1. “1” means to input high level, “0” means to input low level; bit15~bit5 are stored for usage in future.

Note 2: the data read by this address is 16bit, of which bit2~bit0 mean the output state of DO3~DO1. “1” means to output high level, “0” means to output low level; bit15~bit3 are stored for usage in future.

6.7 Operation example

The following three operation examples explain the operation of parameter section and quantity of state.

The quantity of state operation: this part is read only:

The value for “d-A1”quantity of sate in “d- ”of servo drive shows 8. The unit is mV. When it reads the quantity of state as “speed analog command voltage” through communication interface, the value is 8. The unit is mV.

Operation for parameter: this part is read-write:

The drive parameter P006（the first speed circulation integral time constant）shows 20.0. The unit is ms. Read parameter P006 through communication interface. The value is 20.0. The precision of this parameter is accurate to the place after the decimal point. It is magnified ten times when it is read out.

The drive parameter P007（the first torque filtering time constant）shows 1.00. The unit is ms. The value of parameter P007 modified through communication interface is 2.00. The value written in is 200. The precision of this parameter is accurate to the second place after decimal point. It needs to be magnified 100 times when it is written in. If parameter 2 is written directly, the parameter P007 of drive shows 0.02.

Write the value of state quantity in parameter:

In the speed control mode, the external input analog value is 0. The value of “d-A1”quantity of state in drive“d- ”is zero bias of analog. It can be read out through communication interface, and written into the parameter P047 of drive to eliminate zero bias. The value of state quantity is interger. The value of parameter P0-47 accurates to the place after decimal point. When read out, the value is intrgral value without magnify. While written in, it needs to be magnified ten times before written in.

In the instruction of above example, the “d-A1”of drive “d- ”shows 8. The unit is mV. This state quantity is read as “8”. “80” should be written into parameter P047.

Chapter 7 Alarm

7.1 Alarm table

Alarm code	Alarm Name	Alarm content	Alarm clear
Err--	No alarm occurs	Normal operation	
Err 1	Over speed	Servomotor speed exceeds the speed limit.	no
Err 2	Over voltage of the main power supply	The voltage of the main power supply exceeds the specified value.	no
Err 4	Position deviation exceeds the limit value	The counter of position deviation exceeds the setting limit value.	can
Err 7	Drive inhibition abnormal	CCWL、CWL the inputs of drive inhibition are not effective.	can
Err 8	Overflow of position deviation counter	The absolute value of position deviation counter exceeds 2^{30}	can
Err 9	Encoder signal fault	Lack of the signals of encoder	no
Err11	Power model fault	Power model fault occurs.	no
Err12	Over current	Over-current of servomotor	no
Err13	Overload	Overload of servomotor	no
Err14	Overload of brake peak power	Instantaneous load is too big in short brake time	no
Err15	Incremental Encoder counter error	Incremental Encoder counter is abnormal	no
Err16	Over-heat of servomotor	The heat load of servomotor exceeds the setting value (I^2t detection)	no
Err17	Overload of brake average power	Average load is too big in brake time	no
Err18	Overload of power model	Average output load of power model is too big	no
Err20	EEPROM error	EEPROM error occurs when read or white.	no
Err21	Logic circuit error	Logic circuit fault outside DSP	no
Err23	AD conversion error	Circuit or current sensor fault	no
Err24	Under voltage of control power supply	The LDO fault of control circuit	no

Err27	Phase loss alarm	Check whether the power line is three phase input or not	no
Err29	Over-torque alarm	The torque of servomotor exceeds the setting value and lasting time	can
Err30	Lost Z signal of encoder	Z signal of encoder is loss.	no
Err31	UVW signals error of encoder	The UVW Signals error or pole number does not match with the servomotor	no
Err32	Illegal code of encoder UVW signals	UVW signals are all high level or low level	no
Err33	Error signal of saving wire encoder	Has no high resistance in the timing chart when power supply turns on.	no
Err35	Connection path fault in drive	Connection path fault in drive	no
Err36	Fan alarm	Fan alarm	no
Err40	Absolute encoder communication error	Drive can not communicate with encoder	no
Err42	Fault internal counting of absolute encoder	Absolute encoder counts abnormally	no
Err43	Absolute encoder communication responds error	Absolute encoder communication responds abnormally	no
Err44	Absolute encoder verifies error	The communication content of absolute encoder is fault.	no
Err45	Absolute encoder EEPROM is error	Absolute encoder EEPROM fault	no
Err46	Absolute encoder parameter is error	Absolute encoder parameter is destroyed	no
Err47	The external battery of absolute encoder is error	Battery voltage is too low	no
Err48	The external battery of absolute encoder alarms	Battery voltage is low	no
Err50	The parameter of Motor does not match that of drive.	The power of Motor does not match that of drive	no
Err51	Resolver loses of tracking	Encoder wire connection error	no
Err52	Resolver degradation of signal	Encoder wiring does not reach the requirement	

7.2 The reason and handling of alarm

Err 1 (Over speed)

Potential cause	Check	Handle
Servomotor U、V、W connection is not correct	Check U、V、W wiring	Correct U、V、W wiring. The U、V、W must connect with servo driver terminal U、V、W correspondently.
Speed overshoot	Check the operation status and the parameters	Adjust servo gain to reduce the overshoot; In speed control mode can increase acceleration/deceleration time.
Encoder wiring error	Check the encoder wiring	Correct wiring.

Err 2 (Main circuit over-voltage)

Potential cause	Check	Handle
The voltage of input AC power supply is too high	Check the voltage of power supply	Use correct power supply according with the specifications.
Regeneration fault	Regenerative resistor and/or IGBT damaged; Connection circuit is open.	Repair.
Regeneration energy too large	Check the regeneration load factor	Decrease the start-stop frequency. Increase acceleration/deceleration time Reduce the torque limit. Reduce the load inertia. Replace a bigger power servo driver and servomotor Replace a bigger brake resistor

Err 4(Position deviation)

Potential cause	Check	Handle
Servomotor U、V、W connection is not correct	Check U、V、W wiring	Correct U、V、W wiring. The U、V、W must connect with servo driver terminal U、V、W correspondently.
Encoder zero point changes	Check the encoder zero point	Install the encoder again and adjust the zero point.
The encoder wiring error	Check the encoder wiring	Correct wiring
The servomotor is blocked	Check the servomotor shaft and its mechanical connection	Repair.
The command pulse frequency is too high	Check input frequency and the parameter of division/multiplication	● Slow down the input frequency. ● Adjust the parameter of division/multiplication.
The gain of position loop is too small	Check the parameters P009 and P013	Increasing the gain of position loop.
The excess position deviation range is too small	Check the parameter P079	Increasing the value of parameter P079.
Torque is not enough big	Check torque	● Increase the torque limit. ● Increase smooth filtering time for position command. ● Reduce load. ● Replace the servo driver and servomotor with bigger ones.

Err 7 (Drive inhibition abnormal)

Potential cause	Check	Handle
The CCWL and/or CWL over-travel inhibition is invalid when servo is on	Check CCWL、CWL wiring	● Correct input CCWL、CWL signal. ● If not use CCWL、CWL signal can shield it by setting parameter P097.

Err 8 (Overflow of position deviation counter)

Potential cause	Check	Handle
The servomotor is blocked	Check the servomotor shaft and its mechanical connection	Repair.
The command pulse is abnormal	Check command pulse	

Err 9 (Encoder signal fault)

Potential cause	Check	Handle
Encoder wiring error	Check the encoder wiring	Correct wiring
Encoder cable and/or connector is bad	Check cable and connector	Replace the cable and connector.
Servomotor type setting is not correct.	Check the servomotor type	Set the servomotor type again.
Encoder is damaged	Check the encoder	Replace the encoder.

Err11 (IGBT model fault)

Potential cause	Check	Handle
Short-circuit at drive output (U、V、W)	Check U、V、W wiring	Repair or replace the short-circuited wiring.
Motor winding insulation is damaged	Check the servomotor	Replace the servo motor
Servo driver is damaged	Check the servo driver	Known the servomotor to be no fault, and then turn on the power supply again, if the alarm still exists, the servo driver may damage possibly. Replace the servo driver.
Ground is bad	Check the ground wiring	Ground correctly.
Suffer from interference	Check interference source	Adds line filter; Keep away interference source.

Err12 (Over-current)

Potential cause	Check	Handle
Short-circuit at drive output (U、V、W)	Check the wiring connections between servo driver and servomotor.	Repair or replace the short-circuited wiring.
Motor winding insulation is damaged	Check the servomotor	Replace the servomotor.
Servo driver is damaged	Check the servo driver	Known the servomotor to be nofault, and then turn on the power supply again, if the alarm still exists, the servo driver may damage possibly. Replace the servo driver.

Err13 (Over-load)

Potential cause	Check	Handle
Excess the rated load for continuous duty operation	Check the load factor	Reduce load or replace the servo driver with bigger one.
System unstable	Check the oscillation when servomotor is in running	Reduce the gains of the system
Acceleration/deceleration is too short	Check the smoothness when servomotor is in running	Increasing acceleration/deceleration time setting.
Encoder zero point changes	Check the encoder zero point	Install the encoder again and adjust the zero point.

Err14 (Overload of brake peak power)

Potential cause	Check	Handle
The voltage of input AC power supply is too high	Check the voltage of power supply	Use correct power supply according with the specifications.
Regeneration fault	Regenerative resistor and/or IGBT damaged; Connection circuit is open.	Repair.
Regeneration energy too large	Check the regeneration load factor	Decrease the start-stop frequency. Increase acceleration/deceleration time Replace a bigger power servo driver and servomotor Replace a bigger brake resistor

Err15 (Encoder counter error)

Potential cause	Check	Handle
Encoder wiring error	Check the encoder wiring	Correct wiring included shield wire.
Ground is bad	Check the ground wiring	Ground correctly.
Suffer from interference	Check interference source	Keep away interference source.
Encoder has problem	● Check the line number and pole number ● Check the encoder Z signal ● Encoder damaged	Replace the encoder.

Err16 (Motor over-heat)

Potential cause	Check	Handle
Excess the rated load for continuous duty operation	Check the load factor and the rise in temperature of motor	Reduce load or replace the servo driver with bigger one.
Encoder zero point changes	Check the encoder zero point	Install the encoder again and adjust the zero point.

Err17 (Brake average power overload)

Potential cause	Check	Handle
The voltage of input AC power supply is too high	Check the voltage of power supply	Use correct power supply according with the specifications.
Regeneration energy too large	Check the regeneration load factor	● Slow down the starting and stopping frequency. ● Increase acceleration /deceleration time setting. ● Reduce the torque limit. ● Decreasing the load inertia. ● Replace the servo driver and servomotor with bigger ones. Replace a bigger brake resistor

Err18 (IGBT model over-load)

Potential cause	Check	Handle
Excess the rated load for continuous duty operation	Check current	Reduce load or replace the servo driver with bigger one.
Encoder zero point changes	Check the encoder zero point	Install the encoder again and adjust the zero point.

Err20 (EEPROM Error)

Potential cause	Check	Handle
EEPROM chip is damaged	Turn on the power again and check	If the error still exists, then replace the servo driver.

Err21 (Logic circuit error)

Potential cause	Check	Handle
Control circuit fault	Turn on the power again and check	If the error still exists, then replace the servo driver.

Err23 (AD conversion error)

Potential cause	Check	Handle
Current sensor and connector fault	Check the main circuit	Replace the servo driver.
AD converter and analog amplifier fault	Check the control circuit	Replace the servo driver.

Err24 (Under voltage of control power supply)

Potential cause	Check	Handle
Control circuit LDO fault	Check the power of control board	Replace the servo driver.

Err27 (Phase loss alarm)

Potential cause	Check	Handle
Phase loss of power supply	Check the wiring of L1, L2,L3	Connect wire correctly
Power supply undervoltage	Check supply power voltage	Ensure correct voltage input
Phase loss checking return circuit error	Check optocoupler, power on again	If error still exists, please replace drive

Err29 (Over-torque alarm)

Potential cause	Check	Handle
Unexpected big load occurs	Check load condition	Correctly readjust the load.
Parameter P070、P071、P072 setting is not reasonable	Check the parameters	Correctly readjust parameters.

Err30 (Lost Z signal of encoder)

Potential cause	Check	Handle
Encoder has problem	Check the encoder Z signal	Replace the encoder
Encoder cable and/or connector has problem	Check cable and connector	Replace the cable and connector.
The interface circuit of the servo driver is at fault	Check the control circuit	Replace the servo driver.

Err31 (Encoder UVW signal error)

Potential cause	Check	Handle
Encoder has problem	● Check the line number and pole number ● Check the encoder UVW signals ● Encoder damaged	Replace the encoder.
Encoder wiring error	Check the encoder wiring	Correct wiring included shield wire.

Err32 (Illegal code of encoder UVW signals)

Potential cause	Check	Handle
Encoder has problem	Check the encoder UVW signals	Replace the encoder.
Encoder wiring error	Check the encoder wiring	Correct wiring included shield wire.

Err33 (Wire saving encoder error)

Potential cause	Check	Handle
Encoder has problem	Check the encoder signals	Replace the encoder.
Servomotor type setting is not correct	Check the servomotor type; Confirm that the servomotor is adapted with the wire saving encoder.	Set the servomotor type again.

Err 35 (Drive interior connection path error)

Potential cause	Check	Handle
Drive interior connection wire error	Check flexible connection wire	Replace flexible connection wire
Hardware circuit error	Optocoupler access	replace drive

Err 36(Fan alarm)

Potential cause	Check	Handle
fan alarm	check fan	replace fan

hardware circuit error	Optocoupler access	replace drive

Err40 (Absolute encoder communication error)

Potential cause	Check	Handle
Encoder connection wiring error	Check encoder connection wiring	Connect wiring correctly
Encoder cable and connector unsteady	Check cable and connector	Replace cable and connector
Encoder damage	Check encoder	Replace encoder

Err42 (Absolute encoder interior counting error)

Potential cause	Check	Handle
Encoder cable and connector unsteady	Check cable and connector	Replace cable and connector
Encoder damage	Check encoder	Replace encoder

Err43 (Absolute encoder communication responds error)

Potential cause	Check	Handle
Encoder cable and connector unsteady	Check cable and connector	Replace cable and connector
Encoder damage	Check encoder	Replace encoder

Err 44 (Absolute encoder verify error)

Potential cause	Check	Handle
Encoder cable and connector unsteady	Check cable and connector	Replace cable and connector
Encoder damage	Check encoder	Replace encoder

Err45 (Absolute encoder EEPROM error)

Potential cause	Check	Handle
Encoder cable and connector unsteady	Check cable and connector	Replace cable and connector
Encoder EEPROM damage	Check encoder	Replace encoder

Err46 (Absolute encoder parameter error)

Potential cause	Check	Handle
Encoder cable and connector unsteady	Check cable and connector	Replace cable and connector
Encoder EEPROM damage	Check encoder	Replace encoder

Err47 (Absolute encoder external battery error)

Potential cause	Check	Handle
External battery out of power	External battery voltage	Replace battery

Err48 (Absolute encoder external battery alarm)

Potential cause	Check	Handle
External battery out of power	External battery voltage	Replace battery
First time power on after replacing battery	battery voltage	If voltage is normal, please restart encoder. Refer to chapter 3.6.1

Err50 (Motor parameter does not match that of drive)

Potential cause	Check	Handle
The power of motor does not match that of drive	Check the motor match list of drive	Replace suitable drive or motor

Err51 (Resolver loses track)

Potential cause	Check	Handle
Encoder wiring error	Check whether encoder shield is good or not	Connect wiring correctly, including shield wiring
Encoder wiring does not reach the requirement	Check whether encoder is twisted-pair	Replace encoder signal cable

Err52 (Resolver signal degradation)

Potential cause	Check	Handle
Encoder wiring fault	Check whether encoder shield is good or bad	Connect wiring correctly, including shield wiring
Encoder wiring does not reach the requirement	Check whether encoder is twisted-pair	Replace encoder signal cable

Chapter 8 Specifications

8.1 Types of servo driver

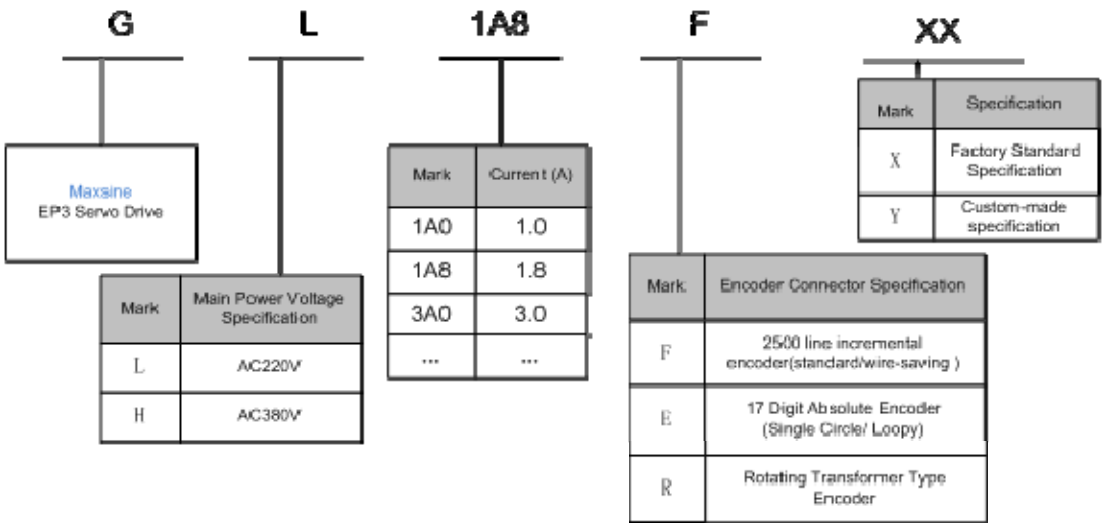

8.2 Dimensions of servo driver

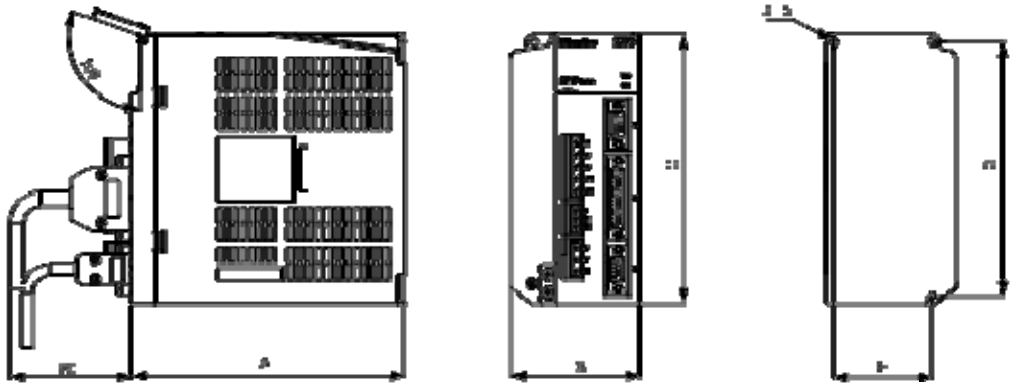

Model / Size（mm）	GL1A0	GL1A8/GL3A0	GL7A5	GL120	GL160	GL190	GL240
A	150	150	180	180	180	180	210
B	55	65	85	95	95	105	115
C	168	168	168	168	200	220	250
D	158	158	158	158	189	209	239
E	-	55	65	65	65	94	104

Model / Size（mm）	GH3A5/GH5A4	GH8A5	GH130	GH170
A	180	180	180	210
B	95	95	105	115
C	168	200	220	250
D	158	189	209	239
E	65	65	94	104

8.3 Specifications of servo driver

Type		GL 1A0	GL 1A8	GL 3A0	GL 7A5	GL 120	GL 160	GL 190	GL 240	GH 3A5	GH 5A4	GH 8A5	GH 130	GH 170
Rated output power(KW)		0.1	0.2	0.4	1.0	1.5	2.0	3.0	5.0	1.0	1.5	2.0	3.0	5.0
Rated output current(A)		1.0	1.8	3.0	7.5	12.0	16.0	13.0	24.0	3.5	5.4	8.5	13.0	17.0
Power supply	Main power supply	Single phase 220VAC			Three-phase AC220V -15%～+10% 50/60Hz					Three-phase 380VAC -15%～+10% 50/60Hz				
	Control power supply	Single phase 220VAC-15%～+10% 50/60Hz								24VDC±15% no less than 1.5A				
Environment	Temperature	Operation：0～40°C Storage：-40～50°C												
	Humidity	Operation：40%～80% (non-condensing) Storage：93% or less(non-condensing)												
	Atmospheric pressure	86kPa ～ 106 kPa												
IP rating		IP20												
Control of main circuit		vector control												
Regeneration		Built-in/ built-out												built-out
Feedback type		2500P/R incremental encoder, 17 bits absolute encoder, resolver type encoder												
Control modes		Position, Speed, Torque, Position/Speed, Speed/Torque, Position/Torque												
Digital inputs		Five programmable input terminals (optical isolation)												
Digital outputs		Three programmable output terminals (optical isolation)												
Encoder signal outputs	Signal type	A、B、Z (Differential output), Z signal (open collector output)												
	Wiring number	programmable fractional frequency(using incremental encoder) / 1～131072P/R (using absolute encoder)												
Position	Input frequency	Differential input：≤500kHz(kpps); Single-end input：≤200kHz(kpps)												
	Command modes	Pulse+Direction：CCW pulse+CW pulse; A phase+B phase(orthogonal).												
	Electronic gear ratio	1～32767/1 ～ 32767												
Speed	Analog command	±10VDC，Input impedance 10kΩ												

	input	
	Acceleration/deceleration command	Parameter setting
	Command source	Analog voltage, Internal speed command
Torque	Analog command input	-10V～+10V，Input impedance 10kΩ
	Speed limit	Parameter setting
	Command source	Analog voltage, Internal torque command
Special function		Homing, Gain switching, Notch of mechanical resonance , supporting Modbus protocol
Monitor function		Speed, current position, position deviation, motor torque, motor current, command pulse frequency, etc.
Protection function		Over-speed, over-voltage, over-current, over-load, regeneration abnormal, encoder signal abnormal, excess position deviation, etc.
Characteristic	Frequency response of speed	≥300Hz
	Fluctuation of speed	<±0.03%(load 0～100%)；<±0.02%(power supply -15～+10%)
	Speed control range	1:5000

8.4 Adaptive table for servo motor selections

8.4.1 Maxsine motor matching scheme

Maxsine AC servo motor has two series, A and K. The detailed distinguish method is: the motor with the production serial number beginning from A to J, is A series motor. For example, B20494890202. The motor with the production serial number beginning from K to T is K series motor. For example, L20494890203. Blank parts mean that the drive does not match the motor.

Model(220V series)	Torque N·m	Speed r/min	Power KW	Adaptive driver			Maxsine motor	
				Better adaptation	Average adaptation		A series	K series
40MSL00230	0.16	3000	0.05	GL1A0			C041	C041
40MSL00330	0.32	3000	0.1	GL1A0	GL1A8		C042	C042
60MSL00630	0.6	3000	0.2	GL1A8	GL3A0		C065	b061
60MSL01330	1.3	3000	0.4	GL3A0			C066	b062
60MSL01930	1.9	3000	0.6	GL3A0	GL7A5			b063
80MSL01330	1.3	3000	0.4	GL3A0				b081
80MSL02430	2.4	3000	0.75	GL7A5			C083	b082
80MSL03520	3.5	2000	0.73	GL7A5				b083
80MSL04025	4	2500	1	GL7A5				b084
90MSL02430	2.4	3000	0.75	GL7A5				b091
90MSL03520	3.5	2000	0.7	GL7A5				b092
90MSL04025	4	2500	1	GL7A5				b093
110MSL02030	2	3000	0.6	GL7A5			C101	b101
110MSL04020	4	2000	0.8	GL7A5			C102	b102
110MSL04030	4	3000	1.2	GL7A5	GL120		C103	b103
110MSL05020	5	2000	1	GL7A5	GL120		C104	
110MSL05030	5	3000	1.5	GL7A5	GL120	GL160	C105	b104
110MSL06020	6	2000	1.2	GL7A5	GL120		C106	b105

110MSL06030	6	3000	1.8	GL120	GL160		C107	b106
130MSL04025	4	2500	1	GL7A5	GL120		C301	b301
130MSL05025	5	2500	1.3	GL7A5	GL120		C302	b302
130MSL06025	6	2500	1.5	GL7A5	GL120	GL160	C303	b303
130MSL07720	7.7	2000	1.5	GL120	GL160		C305	b312
130MSL07725	7.7	2500	2	GL160	GL190		C304	b304
130MSL07730	7.7	3000	2.3	GL160	GL190		C311	
130MSL10010	10	1000	1	GL7A5	GL120		C306	b305
130MSL10015	10	1500	1.5	GA7A5	GL120	GL160	C307	b306
130MSL10025	10	2500	2.5	GL160	GL190		C309	b307
130MSL15015	15	1500	2.3	GL160	GL190		C308	b308
130MSL15025	15	2500	3.8	GL190	GL240		C310	b309
180MSL17215	17.2	1500	2.7	GL160	GL190			b801
180MSL19015	19	1500	3	GL190	GL240			b802
180MSL21520	21.5	2000	4.5	GL240				b803
180MSL27015	27	1500	4.3	GL240				b805
180MSL35015	35	1500	5.5	GL240				b807
180MSL48015	48	1500	7.2	GL240				b808

8.4.2 Huada and Mige AC servo motor matching scheme

model (220V series)	Torque N·m	speed r/min	power kW	Adaptive driver			Huada	Mige	
				Better adaptation	Average adaptation			Standard type	Wire saving type
60ST-M00630	0.6	3000	0.2	GL1A8	GL3A0			b061	F061
60ST-M01330	1.3	3000	0.4	GL3A0	GL1A8			b062	F062
60ST-M01930	1.9	3000	0.6	GL3A0	GL1A8	GL7A5		b063	F063
80ST-M01330	1.3	3000	0.4	GL3A0	GL1A8		A081	b081	F081
80ST-M02430	2.4	3000	0.75	GL7A5			A082	b082	F082
80ST-M03330	3.3	3000	1.0	GL7A5	GL120		A083		
80ST-M03520	3.5	2000	0.73	GL7A5				b083	F083
80ST-M04025	4	2500	1.0	GL7A5				b084	F084
90ST-M02430	2.4	3000	0.75	GL7A5				b091	F091
90ST-M03520	3.5	2000	0.7	GL7A5				b092	F092
90ST-M04025	4	2500	1.0	GL7A5				b093	F093
110ST-M02030	2	3000	0.6	GL3A0	GL7A5		A101	b101	F101
110ST-M04020	4	2000	0.8	GL7A5				b102	F102
110ST-M04030	4	3000	1.2	GL7A5	GL120		A102	b103	F103
110ST-M05030	5	3000	1.5	GL120	GL7A5	GL160	A103	b104	F104
110ST-M06020	6	2000	1.2	GL7A5	GL120		A104	b105	F105
110ST-M06030	6	3000	1.8	GL120	GL160		A105	b106	F106
130ST-M04025	4	2500	1	GL7A5	GL120		A301	b301	F301
130ST-M05025	5	2500	1.3	GL7A5	GL120		A303	b302	F302
130ST-M06025	6	2500	1.5	GL120	GL7A5	GL160	A304	b303	F303
130ST-M07720	7.7	2000	1.5	GL120	GL160		A305	b312	F312
130ST-M07725	7.7	2500	2	GL160	GL190		A306	b304	F304
130ST-M07730	7.7	3000	2.3	GL160	GL190		A307		

130ST-M10010	10	1000	1	GL7A5	GL120			b305	F305
130ST-M10015	10	1500	1.5	GA120	GL7A5	GL160	A308	b306	F306
130ST-M10025	10	2500	2.5	GL160	GL190		A309	b307	F307
130ST-M15015	15	1500	2.3	GL160	GL190		A310	b308	F308
130ST-M15025	15	2500	3.8	GL190	GL240		A311	b309	F309
150ST-M15025	15	2500	3.8	GL190	GL240		A501	B501	F501
150ST-M15020	15	2000	3.0	GL190				B502	F502
150ST-M18020	18	2000	3.6	GL190	GL240		A502	B503	F503
150ST-M23020	23	2000	4.6	GL240			A503	B504	F504
150ST-M27020	27	2000	5.4	GL240			A504	B505	F505
150ST-M23015	23	1500	3.6	GL190				B506	F506
180ST-M17215	17.2	1500	2.7	GL190	GL160			b801	F801
180ST-M19015	19	1500	3	GL190	GL240			b802	F802
180ST-M21520	21.5	2000	4.5	GL240				b803	F803
180ST-M27015	27	1500	4.3	GL240				b805	F805
180ST-M35015	35	1500	5.5	GL240				b807	F807
180ST-M48015	48	1500	7.2	GL240				b808	F808

8.4.3 380V series motor matching scheme

Model(380V series)	Torque N·m	Speed r/min	Power KW	Adaptive drive		Huada	Maxsine	
				Better adaptation	Average adaptation		A series	K series
110MSH02030	2	3000	0.6	GH3A5		A112		
110MSH04030	4	3000	1.2	GH3A5	GH5A4	A113		
110MSH05030	5	3000	1.5	GH5A4		A114		
110MSH06020	6	2000	1.2	GH3A5	GH5A4	A115		
110MSH06030	6	3000	1.8	GH5A4	GH8A5	A116		
130MSH04025	4	2500	1	GH3A5		A321		
130MSH05025	5	2500	1.3	GH3A5	GH5A4	A323		
130MSH06025	6	2500	1.5	GH5A4		A324		
130MSH07720	7.7	2000	1.5	GH5A4		A325		
130MSH07725	7.7	2500	2	GH8A5		A326		
130MSH07730	7.7	3000	2.3	GH8A5	GH130	A327		
130MSH10010	10	1000	1	GH3A5	GH5A4			
130MSH10015	10	1500	1.5	GH5A4		A328		
130MSH10025	10	2500	2.5	GH8A5	GH130	A329		
130MSH15015	15	1500	2.3	GH8A5	GH130	A330	C320	
130MSH15025	15	2500	3.8	GH130	GH170	A331		
150MSH15025	15	2500	3.8	GH130	GH170	A508		
150MSH18020	18	2000	3.6	GH130	GH170	A509		
150MSH23020	23	2000	4.6	GH170		A510		
150MSH27020	27	2000	5.4	GH170		A511		
180MSH15020	15	2000	3	GH8A5	GH130		C801	
180MSH17215	17.2	1500	2.7	GH130				b809
180MSH19015	19	1500	3	GH130				b810

180MSH20020	20	2000	4	GH130	GH170		C802	
180MSH21520	21.5	2000	4.5	GH170				b811
180MSH25020	25	2000	5	GH130	GH170		C803	
180MSH27010	27	1000	2.7	GH130				b812
180MSH27015	27	1500	4.3	GH170				b813
180MSH30010	30	1000	3	GH130	GH170		C804	
180MSH35010	35	1000	3	GH130				b814
180MSH35015	35	1500	5.5	GH170				b815
180MSH40010	40	1000	4	GH130	GH170		C805	
180MSH48015	48	1500	7.2	GH170				b816

8.5 Types of servo motor

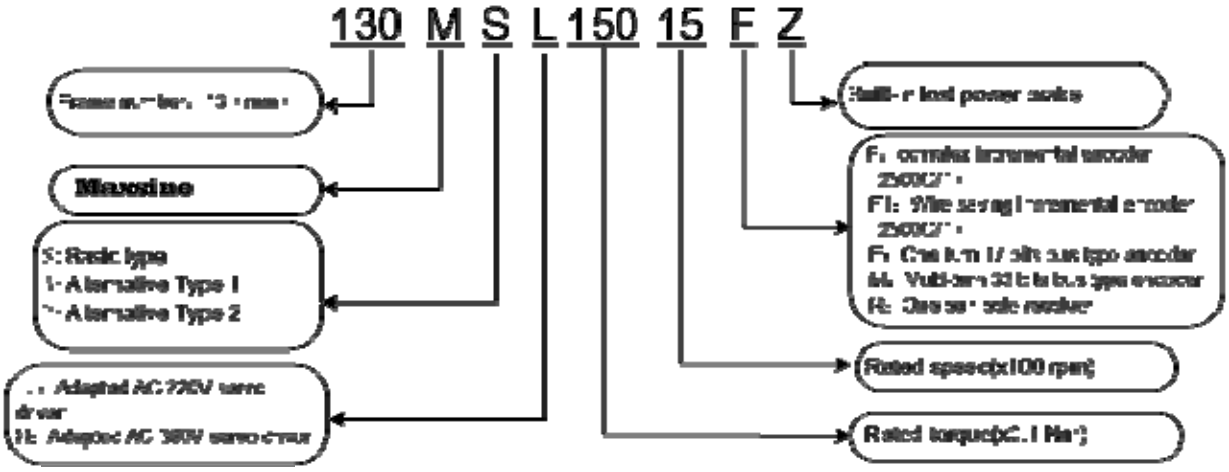

8.6 Servo motor wiring

Please refer 40,60,80,90 series wiring methods to respective specification. 110,130,150,180 series wiring methods are as follows:

8.6.1 Winding wiring

Terminal symbol	Terminal number	Terminal explanation
U	2	U phase drive input
V	3	V phase drive input
W	4	W phase drive input
⏚	1	Ground terminal of motor case

8.6.2 Holding brakes

Terminal symbol	Terminal number	Terminal explanation
DC+	1	The brake power supply is DC, without polarity insert requirement
DC-	2	
⏚	3	Ground terminal of motor case

8.6.3 Incremental Standard encoders

Terminal symbol	Terminal number	Terminal explanation
5V	2	5V input power
0V	3	
A+	4	A phase output
A-	7	
B+	5	B phase output
B-	8	
Z+	6	Z phase output
Z-	9	
U+	10	U phase output
U-	13	
V+	11	V phase output
V-	14	

W+	12	W phase output
W-	15	
PE	1	Metal case of encoder

8.6.4 Incremental Wire saving encoders

Terminal symbol	Terminal number	Terminal explanation
5V	2	5V input power
0V	3	
A+	4	A phase output
A-	7	
B+	5	B phase output
B-	8	
Z+	6	Z phase output
Z-	9	
PE	1	Metal case of encoder

8.7 Parameters of servo motor

8.7.1 Parameters of 40 series servo motor

Motor model	40 series	
	00230	**00330**
Rated power (W)	50	100
Rated line voltage(V)	220	220
Rated line current(A)	0.75	1.5
Rated speed(rpm)	3000	3000
Rated torque (N·m)	0.159	0.318
Peak torque (N·m)	0.477	0.954
Rotor inertia (kg·m^2)	0.025×10^{-4}	0.046×10^{-4}
Lines of encoder(PPR)	2500	
Insulation class	ClassB(130℃)	
IP rating	IP65	
Environmental conditions	Environmental temperature: -20℃ ～ +50℃ environment humidity: Relative humidity <90% (non condensing)	

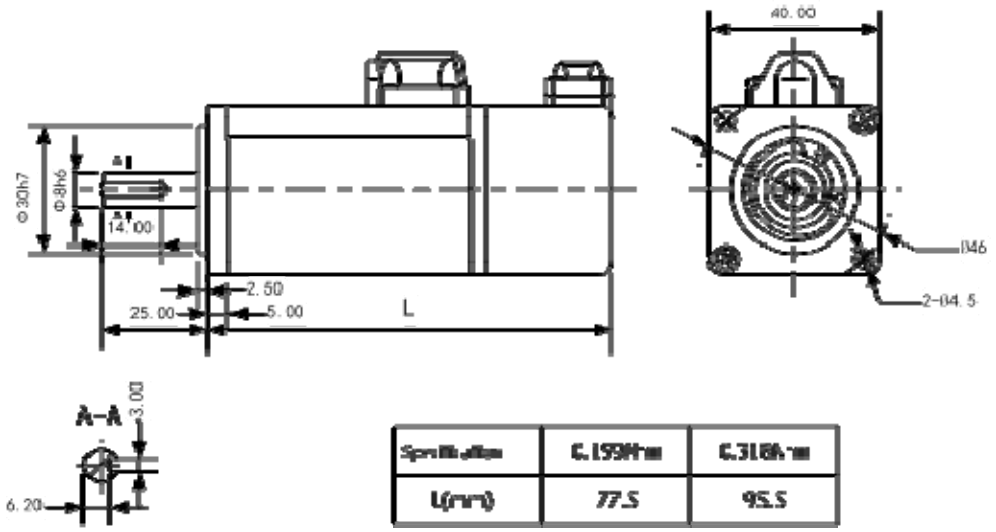

Encoder line sequence:

Socket number	1	2	3	4	5	6	7	8	9	10	11	12	13	14	15
Wiring definition	A+	A-	B+	B-	Z+	Z-	U+	U-	V+	V-	W+	W-	+5V	0V	PE

8.7.2 Parameters of 60 series servo motor

Motor model	60 series		
	00630	**01330**	**01930**
Rated power (KW)	0.2	0.4	0.6
Rated line voltage(V)	220	220	220
Rated line current(A)	1.5	2.8	3.5
Rated speed(rpm)	3000	3000	3000
Rated torque (N·m)	0.637	1.27	1.91
Peak torque (N·m)	1.911	3.8	5.73
Rotor inertia (kg·m^2)	0.17×10^{-4}	0.302×10^{-4}	0.438×10^{-4}
Lines of encoder(PPR)	2500		
Insulation class	ClassB(130℃)		
IP rating	IP64		
Environmental conditions	Environmental temperature: -20℃ ～ +50℃ environment humidity: Relative humidity <90% (non condensing)		

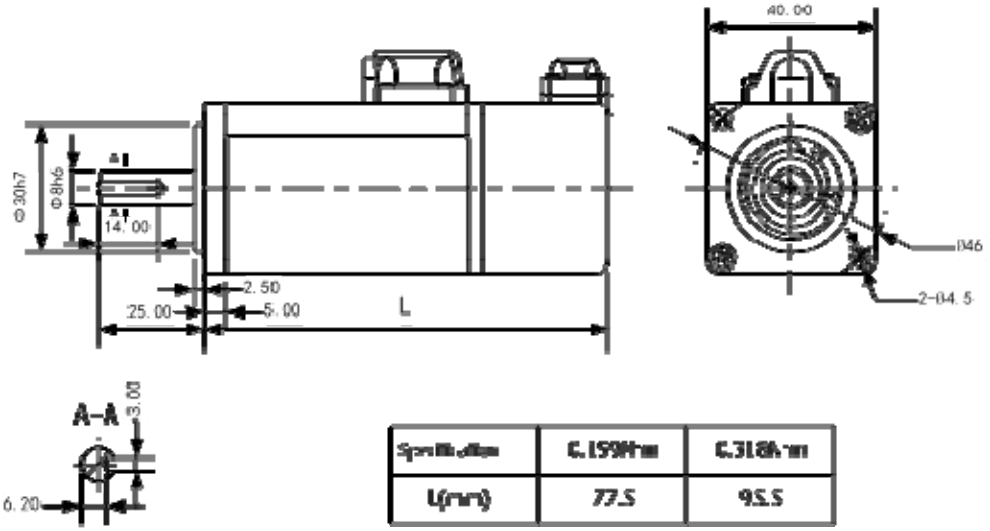

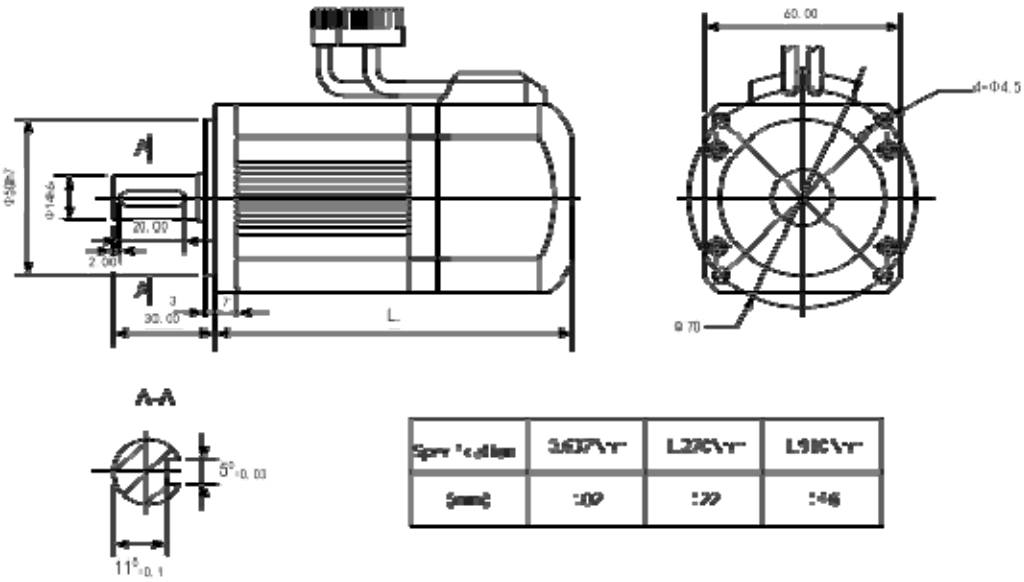

Encoder line sequence:

Socket number	1	2	3	4	5	6	7	8	9	10	11	12	13	14	15
Wiring Definition	PE	5V	0V	B+	Z-	U+	Z+	U-	A+	V+	W+	V-	A-	B-	W-

8.7.3 Parameters of 80 series servo motor

Motor model	80 series			
	01330	**02430**	**03520**	**04025**
Rated power (KW)	0.4	0.75	0.73	1.0
Rated line voltage(V)	220	220	220	220
Rated line current(A)	2.0	3.0	3.0	4.4
Rated speed(rpm)	3000	3000	2000	2500
Rated torque (N·m)	1.27	2.39	3.5	4.0
Peak torque (N·m)	3.8	7.1	10.5	12
Rotor inertia (kg·m^2)	1.05×10^{-4}	1.82×10^{-4}	2.63×10^{-4}	2.97×10^{-4}
Lines of encoder(PPR)	2500			
Insulation class	ClassB(130℃)			
IP rating	IP65			
Environmental conditions	Environmental temperature: -20℃ ～ +50℃ environment humidity: Relative humidity <90% (non condensing)			

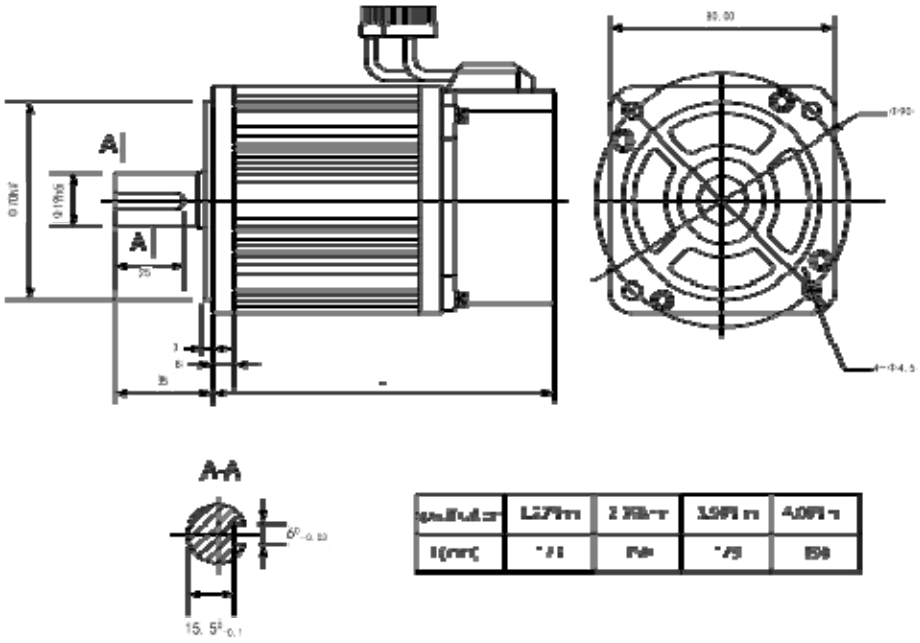

Socket number	1	2	3	4	5	6	7	8	9	10	11	12	13	14	15
Wiring Definition	PE	5V	0V	B+	Z-	U+	Z+	U-	A+	V+	W+	V-	A-	B-	W-

8.7.4 Parameters of 90 series servo motor

Motor model	90 series		
	02430	**03520**	**04025**
Rated power (KW)	0.75	0.73	1.0
Rated line voltage(V)	220	220	220
Rated line current(A)	3.0	3.0	4.0
Rated speed(rpm)	3000	2000	2500
Rated torque (N·m)	2.4	3.5	4.0
Peak torque (N·m)	7.1	10.5	12.0
Rotor inertia (kg·m^2)	2.45×10^{-4}	3.4×10^{-4}	3.7×10^{-4}
Lines of encoder(PPR)	2500		
Insulation class	ClassB(130℃)		
IP rating	IP65		
Environmental	Environmental temperature: -20℃ ～ +50℃ environment		

conditions	humidity: Relative humidity <90% (non condensing)

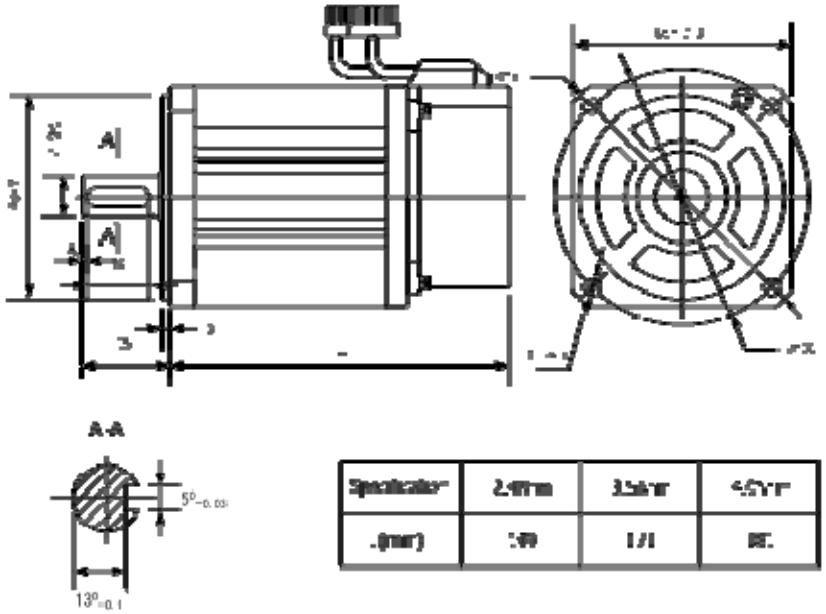

Socket number	1	2	3	4	5	6	7	8	9	10	11	12	13	14	15
Wiring Definition	PE	5V	0V	B+	Z-	U+	Z+	U-	A+	V+	W+	V-	A-	B-	W-

8.7.5 Parameters of 110 series servo motor

Motor model	110 series						
	02030	**04020**	**04030**	**05020**	**05030**	**06020**	**06030**
Rated power (KW)	0.6	0.8	1.2	1.0	1.5	1.2	1.8
Rated line voltage(V)	220	220	220	220	220	220	220
Rated line current(A)	2.5	3.5	5.0	5.0	6.0	4.5	6.0
Rated speed(rpm)	3000	2000	3000	2000	3000	2000	3000
Rated torque (N·m)	2.0	4.0	4.0	5.0	5.0	6.0	6.0
Peak torque (N·m)	6.0	12	12	15	15	18	18
Rotor inertia ($kg·m^2$)	$0.31×10^{-3}$	$0.54×10^{-3}$	$0.54×10^{-3}$	$0.71×10^{-3}$	$0.63×10^{-3}$	$0.76×10^{-3}$	$0.76×10^{-3}$
Lines of encoder(PPR)	2500						
Insulation class	ClassB(130℃)						
IP rating	IP65						
Environmental conditions	Environmental temperature: -20℃ ～ +50℃ environment humidity: Relative humidity <90% (non condensing)						

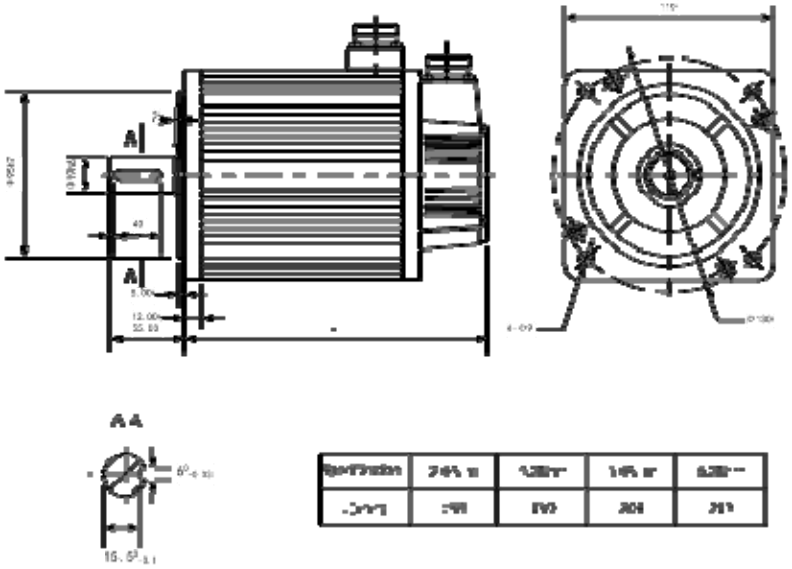

8.7.6 Parameters of 130 series servo motor

Motor model	130 series									
	04025	**05025**	**06025**	**07720**	**07725**	**10010**	**10015**	**10025**	**15015**	**15025**
Rated power (KW)	1.0	1.3	1.5	1.6	2.0	1.0	1.5	2.6	2.3	3.8
Rated line voltage(V)	220	220	220	220	220	220	220	220	220	220
Rated line current(A)	4.0	5.0	6.0	6.0	7.5	4.5	6.0	10	9.5	13.5
Rated speed(rpm)	2500	2500	2500	2000	2500	1000	1500	2500	1500	2500
Rated torque (N·m)	4.0	5.0	6.0	7.7	7.7	10	10	10	15	15
Peak torque (N·m)	12	15	18	22	22	20	25	25	30	30
Rotor inertia ($kg·m^2$)	$0.85×10^{-3}$	$1.06×10^{-3}$	$1.26×10^{-3}$	$1.58×10^{-3}$	$1.58×10^{-3}$	$1.94×10^{-3}$	$1.94×10^{-3}$	$1.94×10^{-3}$	$2.77×10^{-3}$	$2.77×10^{-3}$
Lines of encoder(PPR)	2500									
Insulation class	ClassB(130℃)									
IP rating	IP65									
Environmental conditions	Environmental temperature: -20℃ ～ +50℃ environment humidity: Relative humidity <90% (non condensing)									

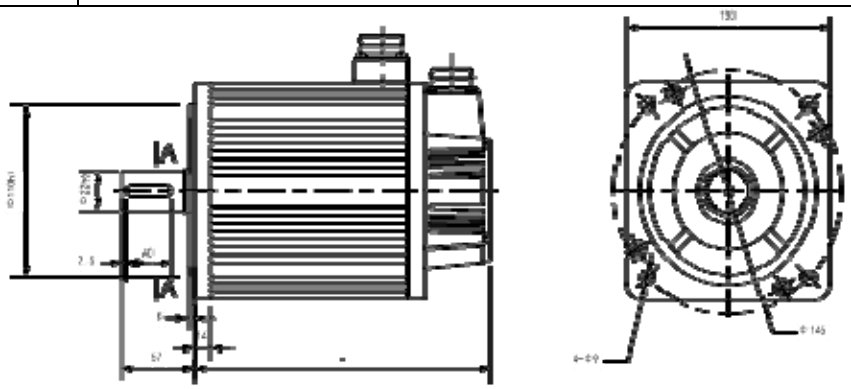

8.7.7 Parameters of 150 series servo motor

Motor model	150 series			
	15025	**18020**	**23020**	**27020**
Rated power (KW)	3.8	3.6	4.7	5.5
Rated line voltage(V)	220	220	220	220
Rated line current(A)	16.5	16.5	20.5	20.5
Rated speed(rpm)	2500	2000	2000	2000
Rated torque (N·m)	15.0	18.0	23.0	27.0
Peak torque (N·m)	45.0	54.0	69.0	81.0
Rotor inertia (kg·m^2)	6.15×10^{-3}	6.33×10^{-3}	8.94×10^{-3}	11.19×10^{-3}
Lines of encoder(PPR)	2500			
Insulation class	ClassB(130℃)			
IP rating	IP65			
Environmental conditions	Environmental temperature: -20℃ ～ +50℃ environment humidity:			

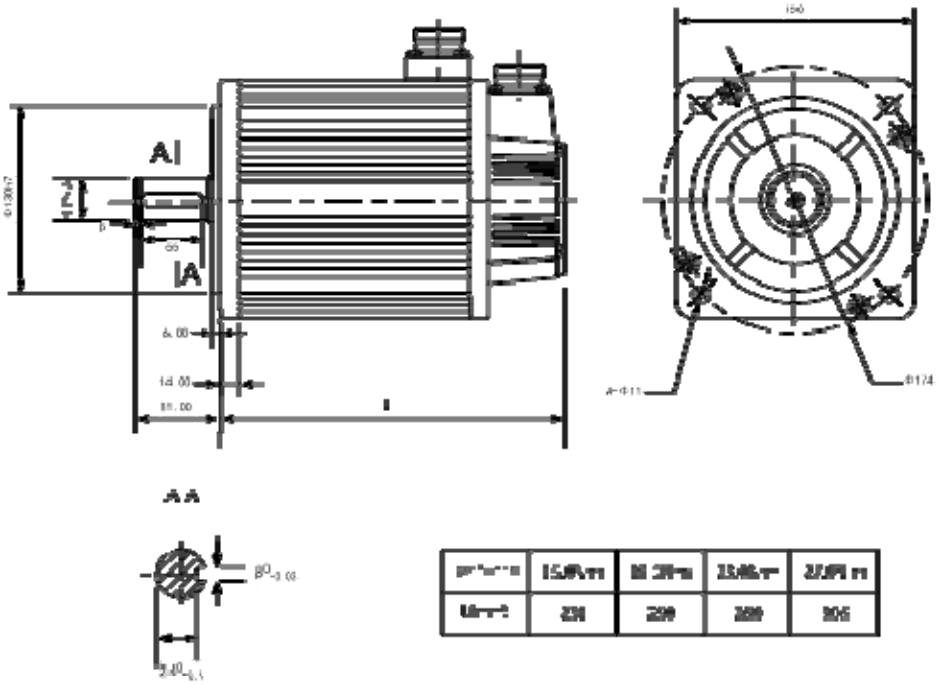

8.7.8 Parameters of 180 series servo motor

220V motor parameter:

Motor model	180 series						
	15020	**17215**	**19015**	**21520**	**27015**	**35015**	**48015**
Rated power (KW)	3.0	2.7	3.0	4.5	4.3	5.5	7.5
Rated line voltage(V)	220	220	220	220	220	220	220
Rated line current(A)	7.5	10.5	12	16	16	19	32
Rated speed(rpm)	2000	1500	1500	1500	1500	1500	1500
Rated torque (N·m)	15	17.2	19	21.5	27	35	48
Peak torque (N·m)	45	43	47	53	67	70	96
Rotor inertia (kg·m^2)	4.68×10^{-3}	3.4×10^{-3}	3.8×10^{-3}	4.7×10^{-3}	6.1×10^{-3}	8.6×10^{-3}	9.5×10^{-3}
Lines of encoder(PPR)	2500						
Insulation class	ClassB(130℃)						
IP rating	IP65						
Environmental conditions	Environmental temperature: -20℃ ～ +50℃ environment humidity: Relative humidity <90% (non condensing)						

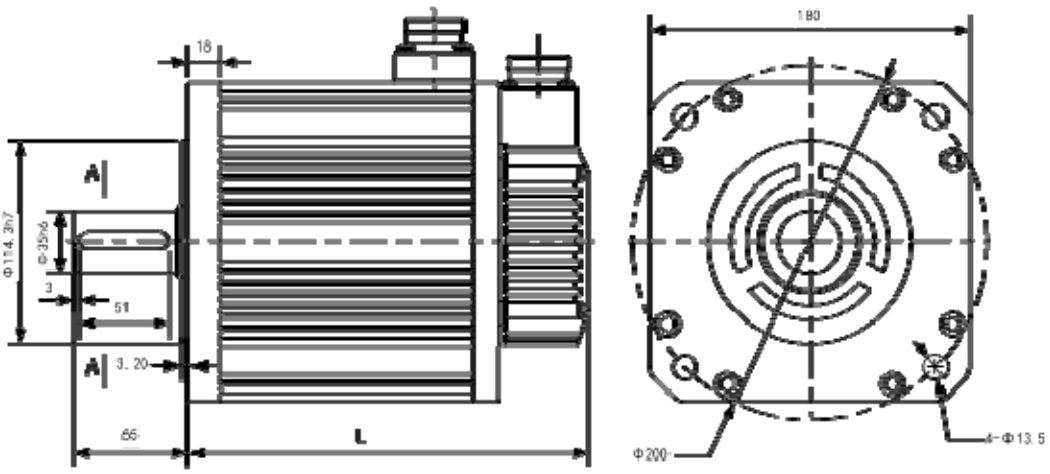

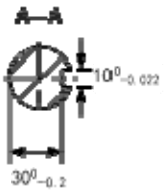

Specification	[illegible]	[illegible]	[illegible]	[illegible]	[illegible]	[illegible]
L(mm)	226	232	243	262	292	346

380V motor parameter:

Motor model	180series										
	15020	**17215**	**19015**	**20020**	**21520**	**25020**	**27015**	**30010**	**35015**	**40010**	**48015**
Rated power (KW)	3.0	2.7	3.0	4.0	4.5	5.0	4.3	3.0	5.5	4.0	7.5
Rated line voltage(V)	380	380	380	380	380	380	380	380	380	380	380
Rated line current(A)	7.5	6.5	7.5	10	9.5	12.5	10	7.5	12	10	20
Rated speed(rpm)	2000	1500	1500	2000	2000	2000	1500	1000	1500	1000	1500
Rated torque (N·m)	15	17.2	19	20	21.5	25	27	30	35	40	48
Peak torque (N·m)	45	43	47	60	53	75	67	90	70	120	96
Rotor inertia ($kg·m^2$)	$4.68×10^{-3}$	$3.4×10^{-3}$	$3.8×10^{-3}$	$6.13×10^{-3}$	$4.7×10^{-3}$	$7.42×10^{-3}$	$6.1×10^{-3}$	$8.87×10^{-3}$	$8.6×10^{-3}$	$11.6×10^{-3}$	$9.5×10^{-3}$
Lines of encoder(PPR)	2500										
Insulation class	ClassB(130℃)										
IP rating	IP65										
Environmental conditions	Environmental temperature: -20℃ ～ +50℃ environment humidity: Relative humidity <90% (non condensing)										

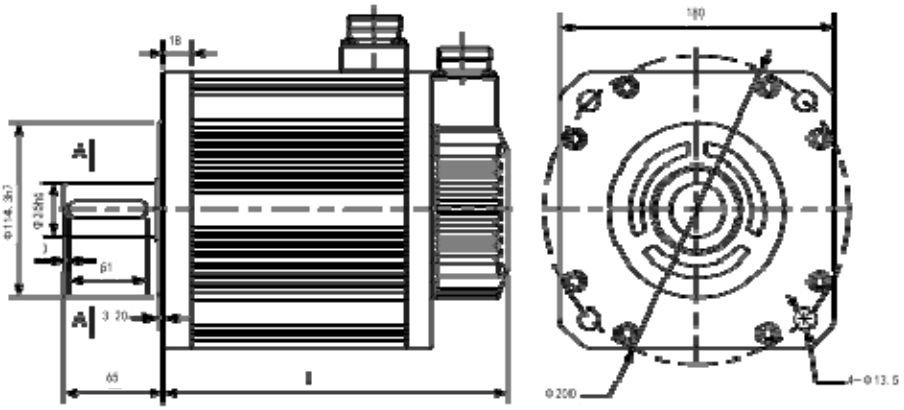

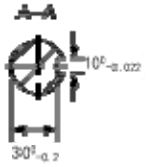

[illegible]	[illegible]	[illegible]	[illegible]	[illegible]	[illegible]	[illegible]
[illegible]	[illegible]	[illegible]	[illegible]	[illegible]	[illegible]	[illegible]

After- service introduction

About the after-service of Maxsine servo driver (hereafter referred to as driver)：

Please do not open driver and try to mend driver by yourself. Disassembly of driver may lead to damage of driver or personal injury. Please contact Maxsine or its appointed distributor if driver is broken or gets any problem. More information about service could be get in below website: **www.maxsine.com**

The handling method for driver scrap:

Most of hardwares in driver are made of electronic components which hold certain working life. Please return to Maxsine those drivers which can not work normally, continuously or totally due to overuse, passing its worklife or being broken seriously. Maxsine will scrap these drivers strictly according to the handling method of company regulations after testing rigorously by related checkout equipment and judging that they could not wok any more or they would cause bad influence because of their severe damage if they go on working.
Anything about dealing with the old and broken drivers, please contact Maxsine.

After-service

When our products are used, if there is any problem so that they can not work normally and need to repair, please call the service number of Maxsine firstly. There will be professional engineer talking with you to offer quick technical support and favorable after-service. Please send broken drivers to Maxsine head office to repair if they are confirmed to be broken ones.

Edition antecedents

Edition number	Published time	Modify content
First edition	Janunary, 2013	Applies to software version

Wuhan Maxsine Electric Co., Ltd
Address: A6, Hangyu Building, No.7, Wuhan University Science Park Road, Donghu District, Wuhan, Hubei Province, China.
Zip code: 430223
Central office: 027-87921282/027-87921283
Sales Tel: 027-87920040/027-87923040 transfer 809/817/818
Sales Fax：86-27-87921290
After service Tel: 027-87921284/027-87921282 transfer 831/832/833
Company Website: www.maxsine.com

Published in January, 2013